2500 KW Condensing steam turbine generator set

TURBINE:
Dresser-Rand , 2500 kw single valve multi stage condensing steam turbine, 6000 rpm, inlet steam 200 to 300 psig, 500 to 600 deg f, exhaust 2"hga, CW rotation looking from governor end, 1 curtis 6 rateau stages, woodward 505 governor. 6" class 600 inlet size, 30" class 125 up exhaust. Hand valve for part load operation. Lube oil system, gland steam condenser.
GENERATOR:
Ideal 2941 kva, 2500 kw, 4160 v, 3 phase, 60 hz. Air cooled with brushless exciter. 1800 rpm
CONDENSER:
Graham surface condenser, 3271 sq. ft, 43,000 lbs/hr steam condensed.
SCOPE OF SUPPLY:
Steam turbine, gear reducer, generator, trip and throttle valve, lube oil system mounted on common skid
Condenser, air ejector, condensate extraction pumps with motor
Generator terminal box with surge protection system, ct's, pt's
Woodward 505 governor turbine control panel, generator breaker and generator relays
Local turbine gauge board.
Neutral ground resister
Manuals and drawings

History unit built 1995 and ran only 8900 hours




CAT. NO.	NAME OF PART	CAT. NO.	NAME OF PART	CAT. NO.	NAME OF PART	CAT. NO.	NAME OF PART
1	SHAFT - TURBINE			200	CASE - STEAM END BEARING	2350	CASE - EXHAUST END BEARING
2	SLINGER - STEAM END PACKING	40	SLINGER - OIL (INNER)	201	CAP - STEAM END BEARING CASE	2351	CAP - EXHAUST END BEARING CASE
8	WHEEL - CURTIS	47	SLINGER - OIL (OUTER)	203	COVER - END	2358	BEARING - EXHAUST END
9	KEY - CURTIS WHEEL			219	GASKET - END COVER	2359	STOP - EXHAUST END BEARING
		100	RING - NOZZLE	700	CASE - STEAM END		
12	BUCKETS, SPACERS, SHROUD - 1ST ROW CURTIS	101	CAULKING STRIP			2362	BAFFLE - OIL (INNER)
16	BUCKETS, SPACERS, SHROUD - 2ND ROW CURTIS			2250	EXHAUST END		
		105	RING - GUIDE BLADING	2251	PACKING - EXHAUST END	2364	BAFFLE - OIL (OUTER)
18	WHEEL - RATEAU (SPECIFY STAGE)	106	BUCKETS, SPACERS, SHROUD - GUIDE BLADING				
19	KEY - RATEAU (SPECIFY STAGE)	107	STOP - GUIDE BLADING RING	2253	VALVE - SENTINEL	2450	SUPPORT - STEAM END
20	BUCKETS, SPACERS, SHROUD - RATEAU (SPECIFY STAGE)	108	DIAPHRAGM (SPECIFY STAGE)			2454	SHIM - STEAM END SUPPORT
21	RING - LOCATING (SPECIFY STAGE)			2262	SHIM - EXHAUST END TO EXHAUST END BEARING CASE	2475	SUPPORT - EXHAUST END
		110	STOP - DIAPHRAGM			2476	SHIM - EXHAUST END SUPPORT
30	SLINGER - EXHAUST END PACKING						

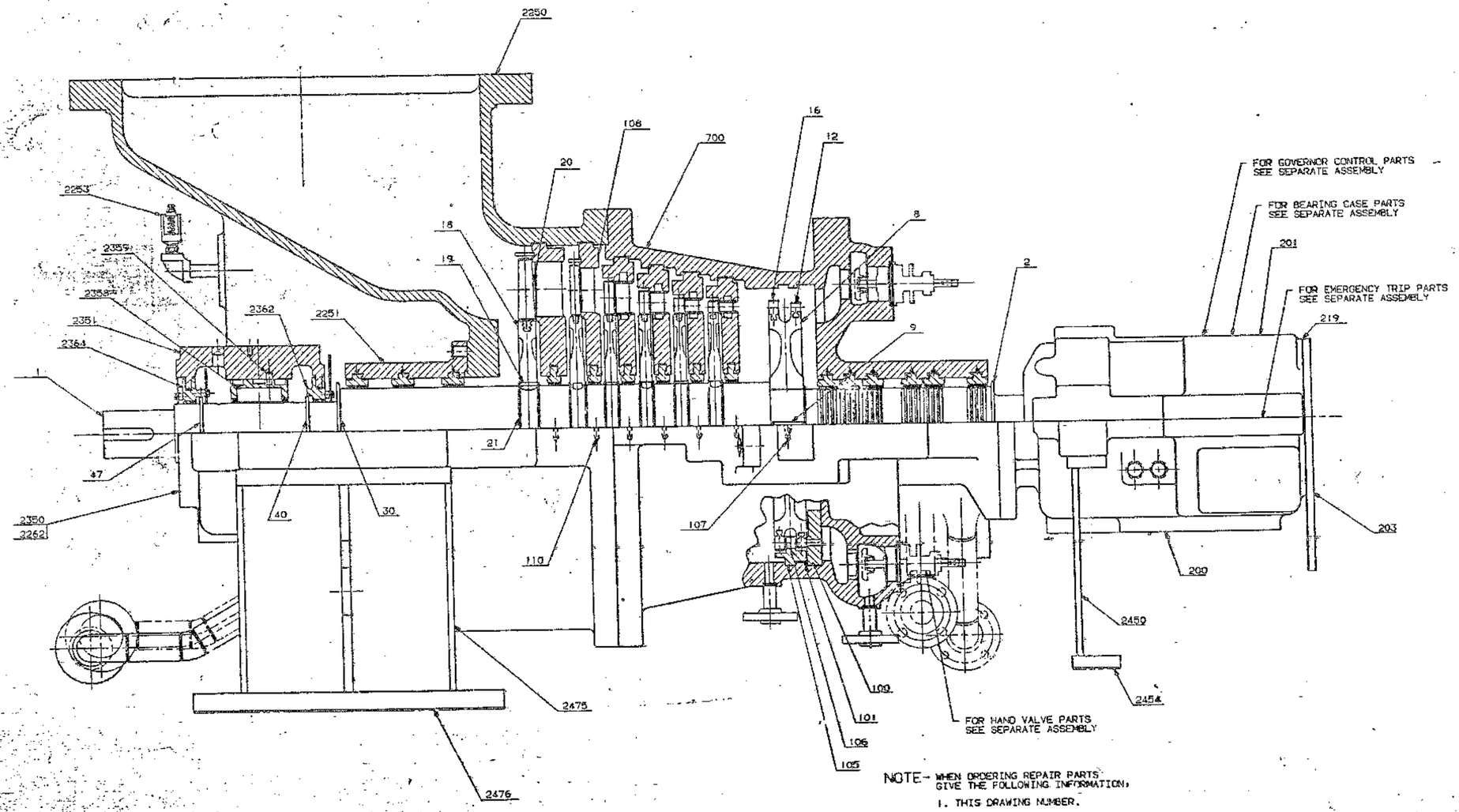

NOTE- WHEN ORDERING REPAIR PARTS GIVE THE FOLLOWING INFORMATION,

1. THIS DRAWING NUMBER.
2. CATALOG NUMBER & NAME OF PART.
3. SIZE, TYPE & SERIAL NUMBER OF UNIT.

SECTION - TURBINE LONGITUDINAL

MST-S4 (S4 CASE) 30"-125# FF UP EXHAUST
6,000 LABY/7,250 LABY/7,250 LABY
SEB-1 S.E. BRG. CASE & EEB-1 E.E. BRG. CASE
ORION TPJ BEARINGS, MANUAL HANDVALVES
GLAND SEAL & CONDENSOR SYSTEM

TURBINE PERFORMANCE

(OTHER POINT: 600 EKW)

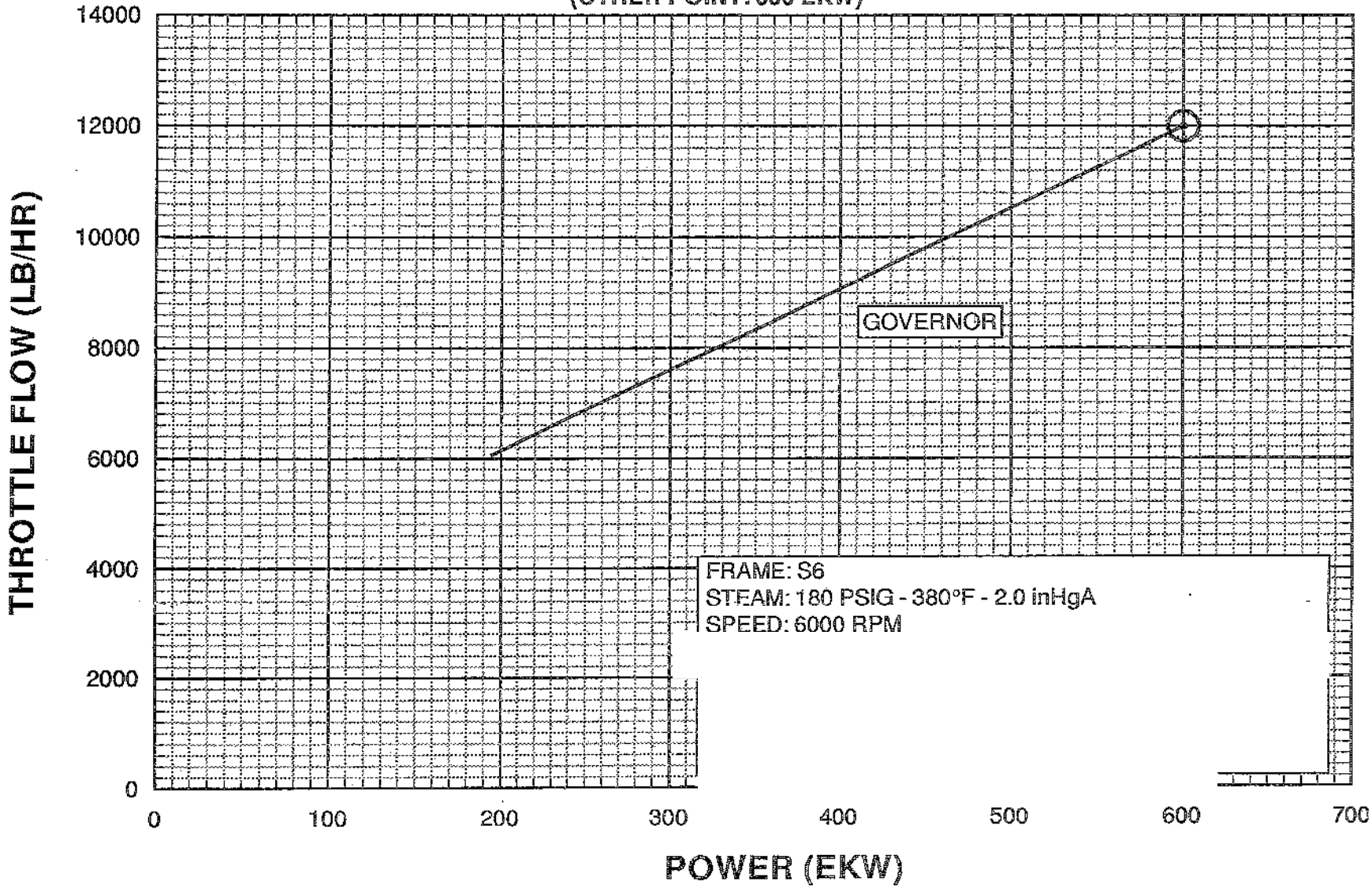

DRESSER-RAND Steam Turbine Division
Wellsville,NY 14895 USA

TURBINE PERFORMANCE

(GUARANTEE POINT: 890 EKW)

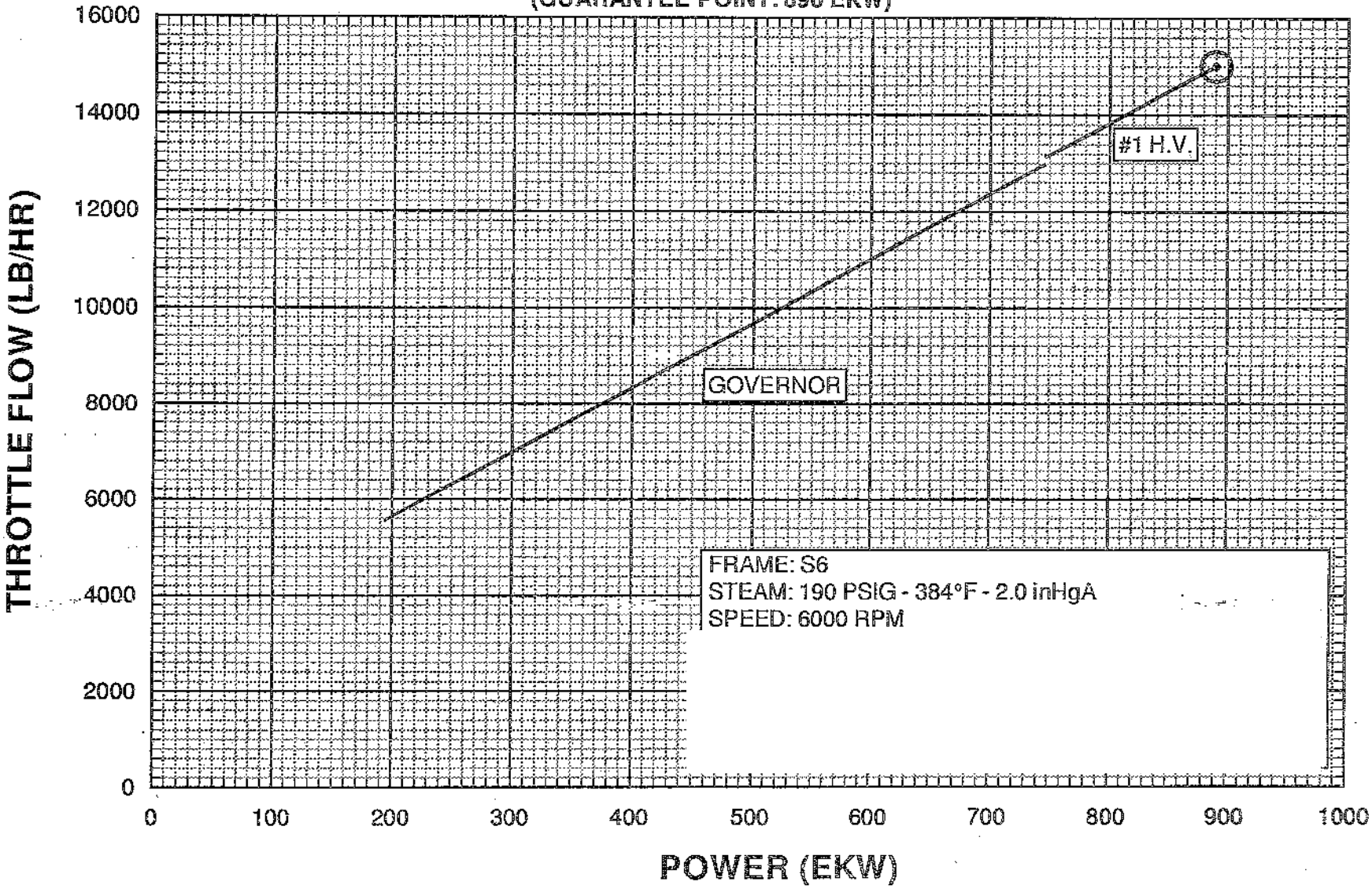

DRESSER-RAND Steam Turbine Division
Wellsville,NY 14895 USA

TURBINE PERFORMANCE
(RATED POINT)

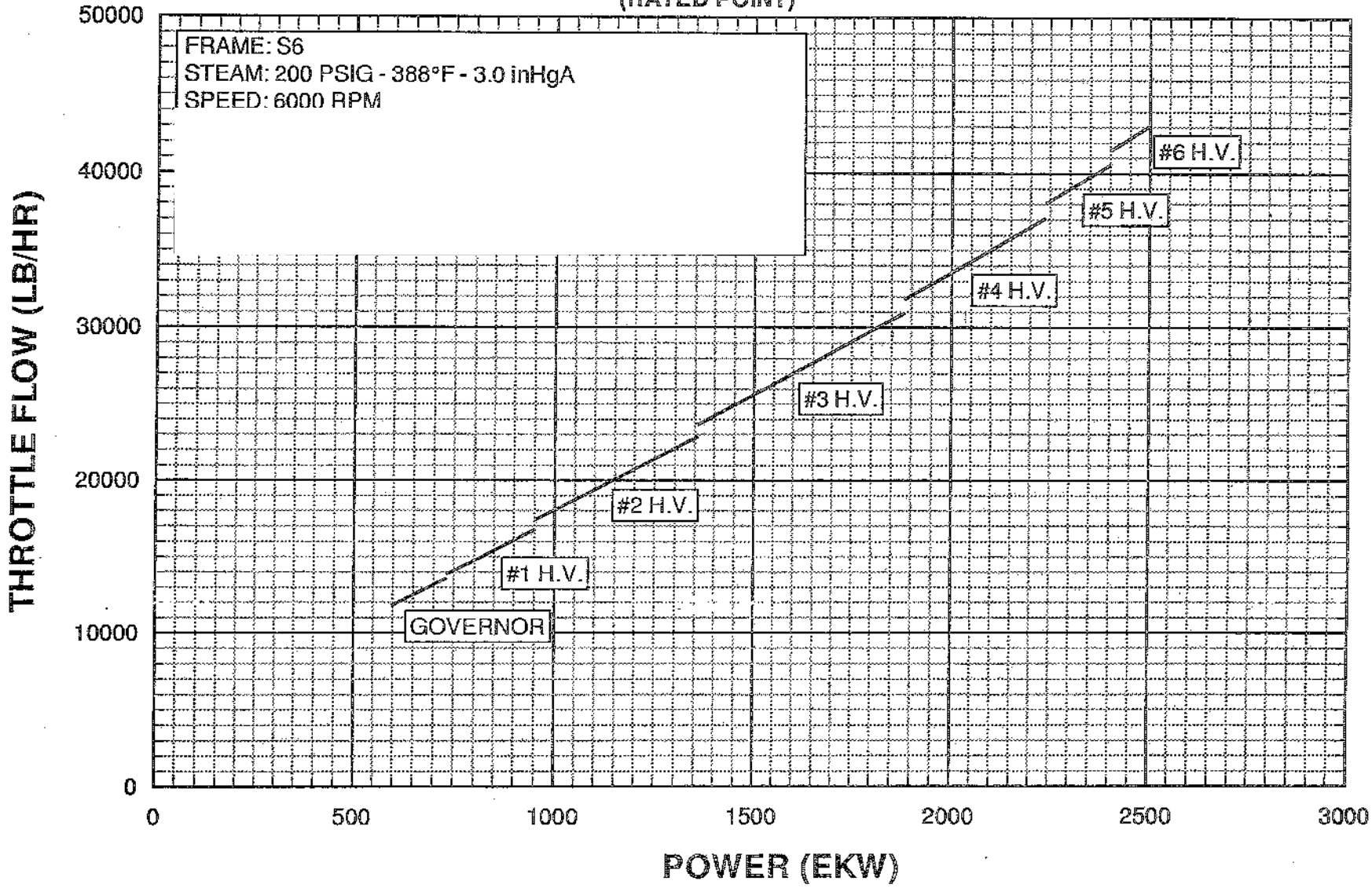

DRESSER-RAND Steam Turbine Division
Wellsville,NY 14895 USA

DRESSER - RAND
STEAM TURBINE DIVISION

MAJOR STEAM CONNECTIONS

REV.	CONN.	FLANGE	SIZE	ANSI	O.D.	B.C.	NO. HOLES	DIA. HOLES	MIN. FLG. THICKNESS	RAISED FACE	REMARKS
	A	TURBINE INLET	6"	600#	14.00	11.50	12	1.12	1.88	.25 x 8.50	RIGHT SIDE
	B	TURBINE EXHAUST	30"	125#	38.75	36.00	28	1.38	2.12	F.F.	UP

AUXILIARY CONNECTIONS

REV.		CONNECTION	NO.	SIZE & TYPE CONNECTION	VALVE REQUIRED	VALVE SUPPLIED BY	CONNECT TO	REMARKS
	C	INLET VALVE ABOVE SEAT DRAIN	1	3/4" 600# ANSI R.F.	YES	D-R	OPEN DRAIN	
	D	INLET VALVE BELOW SEAT DRAIN	1	3/4" 600# ANSI R.F.	YES	D-R	OPEN DRAIN	
	E	INLET T&T VALVE STEM LEAKOFF	1	3/4" FNPT	NO	----	OPEN DRAIN	
	F	GOVERNOR VALVE STEM LEAKOFF	1	3/4" FNPT	NO	----	OPEN DRAIN	
A	G	NOZZLE BOWL DRAIN	1	3/4" 600# ANSI R.F.	YES	D-R	OPEN DRAIN	
A	H	FIRST STAGE DRAIN	1	3/4" 300# ANSI R.F.	YES	D-R	OPEN DRAIN	
	J	EXHAUST DRAIN	1	3/4" 150# ANSI R.F.	YES	D-R	OPEN DRAIN	

7.0 DATA SHEETS

7.1 GENERAL

All data requested hereinafter shall be supplied with each proposal and will be used by the Engineer for evaluation purposes.

The Bidder shall answer all questions as briefly as possible. Where space does not permit sufficient description, the Bidder shall provide additional information such as drawings, cuts or typewritten descriptions.

Name of turbine manufacturer. DRESSER RAND

Name of generator manufacturer. IDEAL OR =

Name of excitation system manufacturer. IDEAL OR =

Name of governor manufacturer. WOODWARD OR =

Overall length. OUTLINE CE 213231 APPROX 295 INCHES

Overall width. " " " 125 INCHES

Overall height. " " " 110 INCHES

7.2 TURBINE/GENERATOR FEATURES

Type of turbine blades

Impulse (stage numbers) (7) SEVEN

Reaction (stage numbers) _____

With the governing valves wide open at design steam conditions, the turbine is expected to pass a throttle flow of 45000 lbs./hr.

Maximum continuous operating pressure 700 PSIG

Maximum continuous operating temperature 750 °F

7.2.1 Turbine Components:

Casing Material INLET & BARREL A216 GR WCB

Type of Support CENTERLINE

Type of Exhaust Flow (UP OR DOWN) CAST IRON A278, CL40

Rotor Material WHEELS A 294 - FORGED
SHAFT 4140 CL BC

Blade Design and Material 403 SS

Blade Shroud Design and Material 403 SS

Nozzle Rings Material 416 SS

Bearings Design and Material JOURNAL - TILT PAD
THRUST - TILT PAD

Seals Design and Material LABY - NI RESIST

Inlet Steam Chest Design and Material A216 GR WCB CAST STEEL

Inlet Steam Valve Design and Material A 351, GD 420 SS

7.2.2 Governor:

Type and Design (include catalog cuts or drawings)	WOODWARD ELECTRONIC
Oil System Design	NONE REQ'D
Pump Design	NONE REQ'D
Accuracy (furnish complete details)	CLASS D

7.2.3 Trip and Throttle Valve:

Design and Material	700 PSIG 750°F
Integral Strainer Design and Material	ST. ST.

7.2.4 Rotor Balance (Tolerance)	PER NEMA
7.2.5 Lubrication System:	PRESSURE LUBE
Type and Design	INTEGRAL
Main Oil Pump Design	POSITIVE DISPLACEMENT
A.C. Auxiliary Pump Design	" "
D. C. Auxiliary Pump Design	" "
Location	IN CASE
Sump Tank Design and Capacity	LATER

Sump Tank Accessories:

PER SPEC

Air/Vapor Removal System BLOWER

Heaters (Design) INCLUDED

Lube Oil Control System (Furnish Drawings, Catalog Cuts, Etc.) SEE TYPICAL DRG # CE 213444

7.2.6 Shaft Sealing System:

Type and Design LABYRINTH / AUTOMATIC SYSTEM

Equipment Furnished (Manufacturer, Size, Flow, Materials of Construction, Etc.): LATER

Steam Jet Ejector Design "

Ejector - Steam Condenser Design "

Cooling Water Flow "

7.2.7 Turbine Gauge Board, Generator/Synchronozing Panel & Switchgear:

Describe Type, Design and Proposed Location PER SPEC

7.2.8 Generator: SEE SEPERATE GENERATOR SHEETS

Rated KVA capability

Generator Reactances

Zero sequence at rated current X_0

Negative sequence at rated voltage X_2

Subtransient at rated voltage X'd

Transient at rated current X'd

Synchronous at rated current X'd _____

SCR at rated KVA _____

Generator efficiency at rated kVA and rated power factor _____ %

Generator regulation at rated power factor 75% kVA _____ ,

100% rated kVA _____ , and 110% rated kVA _____.

7.2.9 Excitation System:

Excitation, voltage _____ , Amperes _____ .

Type of excitation System:

static _____

brushless alternator _____

Can field temperature, voltage and current be measured directly? (Yes or No) _____

If so, how? _____

Electrically-operated field breaker? (Yes or No) _____

Transformer: KVA _____ Primary Volts _____ Secondary Volts _____

Type insulation? Oil _____ Dry _____ .

Approximate weight? _____ .

Electrically-operated Primary Air Circuit Breaker? Yes _____ No _____.

I. C. MVA _____

F. L. Amperes _____

Brushless Alternator: KVA _____ Volts _____

Rectifier: Rotating _____ Stationary _____

Diodes Accessible During Operation? YES _____ No _____

Voltage Regulator

Manufacturer _____

Type _____ Model _____

7.2.10 Neutral Grounding Provision

Reactor _____ Resistor _____.

OHM rating _____ Ampere rating _____.

7.2.11 Structural Requirements:

Total Weight (lbs) ~ 60,000 SEE OUTLINE CE 213231 TURBINE/GEAR/GEN./BASE/LUBE

Weight of Individual Components (List):

Component	(lbs)
TURBINE	12000
GEAR	4000
GENERATOR	22,000
BASEPLATE	18000
ACCESSORIES	2000
CONDENSER	30000
SWITCHGEAR	4000

7.2.12 Speed Reducing Gear (If not Direct Coupled)

Manufacturer NUTALL OR LUFKIN

Type and Design SINGLE REDUCTION

Rated Horsepower and Service Factor 2500 KW 1.3

Input Shaft Speed 6000

Output Shaft Speed 1800

Horsepower Losses at 100% INCLUDED and 50% of rated power _

Cooling Design and Requirements PART OF LUBE SYSTEM

Lubrication Design PRESSURE LUBE

.2.13 Turbine-Generator Performance SEE PROPOSAL SHEET

Throttle Flow lb/hr (@ 190 PSIG & 384°F)	50,000	40,000	25,000	Max	Min
Exhaust Enthalpy Btu/lb					
Generator Output (KVA)					
Steam Rate (lb/kwh)					

CONDENSER SEE PROPOSAL SHEETS

.1 Manufacturer:

Name: GRAHAM

Location: _____

2 Condenser surface area (total effective): _____ sq. ft.

DRESSER-RAND

MULTISTAGE CONDENSING
STEAM TURBINE GENERATOR SET

DRESSER-RAND, Steam Turbine Division, proposes to furnish and deliver to the Purchaser, the Equipment described below FOB/Factories suitably prepared for domestic shipment.

One (1) DRESSER-RAND Steam Turbine/Generator Unit consisting of the following major components:

- One (1) 2500 KW, 6000 rpm, Multistage, Condensing Steam Turbine
- One (1) 2500 KW, 0.85 PF, 3 Phase, 60 Hertz, 4,160 Volts, 1800 RPM, Electric Generator and Exciter.
- One (1) Single Reduction Parallel Shaft Speed Reduction Gear with 1.3 Service Factor.
- One (1) Complete Lubrication System with Oil Reservoir Located in Baseplate.
- One (1) Electro-Pneumatic Control System.
- One (1) Local Turbine Gageboard.
- One (1) Baseplate Under Turbine, Gear, & Generator.
- One (1) High Speed Coupling & Guard for Connecting the Steam Turbine to the Reduction Gear.
- One (1) Low Speed Coupling & Guard for Connecting the Reduction Gear to the Generator.
- One (1) Generator Control & Switchgear Cubicle.
- One (1) Condenser & Accessories

DRESSER-RAND

PERFORMANCE DATA

	Normal	Maximum	Minimum
Steam Inlet Pressure (PSIG) @ Turbine Inlet	190	200	180
Steam Inlet Temperature (°FTT) @ Turbine Inlet	384	388	380
Exhaust Pressure ("HGA)	2.0	3.0	2.0
Rated Output (KW at GENERATOR TERMINALS)	890	2500	600
Throttle Flow Required (LBS/HR)	15,000	43,000	12,000
Exhaust Enthalpy (BTU)	995	986	975
Speed (RPM)	6000/1800	6000/1800	6000/1800

GUARANTEE POINT = NORMAL CONDITION

TECHNICAL DATA

Steam Inlet Flange	6" - 600 lbs./RF - ASA
Steam Exhaust Flange	30" - 125 lbs./FF - ASA

Gear Frame: Nuttall

Generator: Ideal Electric Generator

Turbine Rating: 3352 HP / 2500 KW at 6000 RPM

Rotation Viewed From Governor End of Turbine: Clockwise

Casing Material: Cast Steel Steam End / Cast Iron Exhaust End

Number of Turbine Stages: 1 Curtis and 6 Rateau

Shaft Packing, Labyrinth Rings: 6 at Steam End
3 at Exhaust End
1 in each Diaphragm between Stages

Sentinel Valve sounds a warning at 5 psig

Exhaust Relief Valve starts opening at 6 psig;
opens fully at 10 psig to pass 49172 LB\HR of steam

Oil: SAE 20

Bearing Lubrication: Pressured Lubed At 20 psig

	Flow	Pressure	Driver
Main Oil Pump:	38 GPM	40 psig	Supplied By Nuttall Gear
Auxiliary Oil Pump:	38 GPM	40 psig	Motor

Cooling Water Required
For Oil Cooler: 50 GPM at 85°F
For Gland Condenser: 22.2 GPM at 85°F

DRESSER-RAND

SCOPE OF SUPPLY

Turbine

One (1) Multistage, Frame "S", Single Valve, Steam Turbine, Rated for Continuous Duty up to 700 PSIG - 750°FTT, and Including the Following Accessories:

- 6" Cast Steel Inlet
- 30" Cast Iron Exhaust (UP or DOWN)
- 6" Trip & Throttle Valve w/Stainless Steel Removable Strainer, & Start-Up Strainer
- Hand Valves for Part Load Economy
- Tilt Pad Radial Bearings
- Tilt Pad Thrust Bearing
- Electronic Governor (Woodward 505 or Equal) w/Pneumatic Actuator & Dual Pickups
- Labyrinth End Glands & Interstage Glands Arranged for Automatic Gland Sealing
- Gland Condenser (Shipped Loose for Field Mounting)
- Insulation on Turbine Case & Steam Chest w/Sheet Metal Jacket
- Case Drains Piped & Valved to Edge of Base
- Performance Curves -Flow *vs.* Output
- Lateral Critical Speed Analysis - Dresser-Rand Standard
- Solenoid Trip Device
- Low Oil Pressure Trip Valve
- Trip Limit Switch
- Separate Gageboard - Floor Mounted
- Customer Test Points:
  - Case Hydro Test - Certified
  - Final Rotor Balance - Certified
  - One (1) Hour No-Load Run Test - Witnessed
- NEMA 1 - Electrical Equipment
- All Electrical Wired to Oversized Junction Boxes
- Turning Gear - AC Motor

Gear

One (1) Lufkin or Nuttall Speed Decreasing Gear, Single Reduction, with:

- Ratio - 6000/1800
- AGMA Service Factor at 2500 KW - 1.3
- Fabricated or Cast Iron Housing
- Shaft Driven Main Oil Pump to Provide Lube Oil to Turbine, Gear, & Generator
- Sleeve Radial Bearings
- Thrust Collar

DRESSER-RAND

SCOPE OF SUPPLY

Fabricated Steel Baseplate - Under Turbine, Gear, and Generator

High and Low Speed Couplings with Guards - Spacer Type

Lubrication System

One (1) Lubrication System for Turbine, Gear, and Generator including:

- Carbon Steel Reservoir Built into Baseplate
- Open Drip-Proof Motor Driven Auxiliary Oil Pumps - AC & DC (MOP Mounted on Gear)
- Dual Filters w/25 Micron Filtration Design
- Dual Coolers - 3/8" Tubes, 85°F Cooling Water Design
- Three (3) Way Transfer Valve
- Pressure Gages for Filter Inlet & Discharge
- Air Vent
- Lube Oil Control Valve
- Auxiliary Oil Pump Start Pressure Switch
- Auxiliary Oil Pump Bypass Relief Valve
- Low Oil Pressure Switch
- High Oil Temeprature Switch
- Dial Thermometers - In/Out of Cooler
- Flanged & Welded Carbon Steel Piping Throughout
- Sight Flow Indicators in Each Bearing Drain Line (5 Total)
- Reservoir Heater
- Differential Pressure Switch for Filters
- Oil Level Switch
- Customer Connection for Oil Separation System

Generator

One (1) Synchronous Generator (Ideal Model SAB or Equal) - Brushless Design, Rated 2941 KVA, 2500 KW, at 0.85 Power Factor, 1800 RPM, 3 Phase/60 HZ/4160 Volt, WYE Connected, 6 Leads, 105°C Rise By Resistance Above a 40°C Ambient, Class F Insulation, Continuous Duty Design including:

Electrical Features:

- Damper Windings
- Insulation System to be VPI-Complete Stator
- Field Suitable for Excitation from Brushless Exciter
- Capable of Operating at Rated KVA &Rated Temperature Rise at Altitudes of 3300 Feet Above Sea Level

SCOPE OF SUPPLY

Generator

Electrical Features (Continued)

- Efficiency Guaranteed at Loads:

4/4	-	96.2
3/4	-	96.1
1/2	-	95.4

- Six (6) Leads for Differential Protection
- Short Circuit Ratio Not Less Than 0.6

Mechanical Features

- Two (2) Sleeve Bearings, Bracket Mounted, Suitable for Forced Feed Lubrication from System Furnished by Customer. Ideal will provide Oil In & Oil Out Connections at Bearing Housings Only. No piping is included.
- One (1) Bearing is to be Insulated to Prevent Shaft Currents
- Mechanical Balance per NEMA Standard
- Open Drip-Proof Enclosure with Filters
- Unit to be Capable of 125% Overspeed without Mechanical Injury

Accessories

- Bearing Temperature Detectors - One (1) per Bearing, RTD Type, 120 Ohm Nickle
- Two (2) Grounding Pads on Frame to be Located Diagonally Opposite of Each Other
- Space Heaters
- Six (6) Stator Temperature Detectors, RTD Type, 120 Ohm Copper
- Main Terminal Box Including:
  - Lightning Arrestors
  - Surge Capacitor
  - Oversized to Accomodate Stress Cones Furnished by Others
  - 3 Cts for Differential Protection
  - 3 Cts for Metering
- Brushless Exciter
- Permanent Magnet Alternators (PMA)
- One (1) RTD in Inlet Air Path
- Furnish & Mount B-N Vibration Equipment - Two (2) Probes per Bearing

SCOPE OF SUPPLY

Generator Auxiliary Equipment

One (1) Static Voltage Regulator System Including:

- Two (2) Static Voltage Regulators, ± 1/2% with Single Phase Sensing, Parallel Circuit
- Dual Voltage Adjusting Rheostat - Single Motor Operated
- Underfrequency Protection
- Var/PF Controller
- Manual Voltage Control Module with Selector Switch
- Exciter Diode Failure Monitor
- Minimum/Maximum Excitation Limiter

One (1) Neutral Grounding Resistor Rated 400 AMPS, 10 Seconds, 2400 Volt L/N with Safety Enclosure and CT.

SHEET 2 OF 2

NOTES:

1. STEAM INLET AND EXHAUST PIPING MUST BE PROPERLY SUPPORTED SO AS NOT TO EXCEED ALLOWABLE FORCES AND MOMENTS GIVEN.

2. EXPOSED STEAM PIPING ABOVE 140°F SHOULD BE FIELD INSULATED BY CUSTOMER.

3. INLET CONNECTION CONFORMS TO ANSI B16.5 FOR FACING AND DRILLING REQUIREMENTS.

4. COMPRESSED LENGTH OF SPRING TO BE 4.62.

5. AN EXPANSION JOINT SHOULD BE PLACED IN EXHAUST LINE NEXT TO TURBINE.

6. ALL BOLT HOLES IN FLANGES TO STRADDLE HORIZONTAL AND VERTICAL CENTERLINES UNLESS OTHERWISE SPECIFIED.

7. ALL PIPING CONNECTIONS WILL BE LOCATED PER DRESSER-RAND SHOP SPEC. SS-4000.29.

8. 16 HOLES Ø 1.12 THRU LOWER FLANGE ONLY FOR Ø 1.00 FOUNDATION BOLTS (SEE NOTES 9 & 10).

9. FOUNDATION BOLTS, WASHERS, NUTS AND SLEEVES FURNISHED BY OTHERS.

10. ALL FOUNDATION BOLTS SHOULD NOT BE RIGIDLY LOCATED UNTIL UNIT IS IN PLACE ON FOUNDATION AS BOLT HOLES IN BASEPLATE MAY VARY .25 IN ANY DIRECTION.

11. STEAM END SUPPORT TO BE DOWELED TO BASEPLATE AFTER FINAL ALIGNMENT IN FIELD. 2-#10 P&W TAPER-DOWELS FURNISHED BY DRESSER-RAND.

12. EXHAUST END SUPPORT TO BE DOWELED TO BASEPLATE AFTER FINAL ALIGNMENT IN FIELD. 4-#8 P&W TAPER DOWELS FURNISHED BY DRESSER-RAND.

13. GEAR TO BE DOWELED TO BASEPLATE AFTER FINAL ALIGNMENT IN FIELD. (2) 1/2" STRAIGHT DOWELS FURNISHED BY DRESSER-RAND.

14. GENERATOR TO BE DOWELED TO BASEPLATE AFTER FINAL ALIGNMENT IN FIELD. 2-#8 P&W TAPER DOWELS FURNISHED BY DRESSER-RAND.

15. TURBINE MUST BE ALIGNED PRIOR TO START-UP.

16. 6 HOLES 1"-8 UNC-3B TAP FOR VERTICAL POSITIONING, 2 IN STEAM END SUPPORT, 4 IN EXHAUST END SUPPORT. SCREWS FURNISHED BY DRESSER-RAND.

17. 4 HOLES 1/2"-13 UNC-3B TAP FOR VERTICAL POSITIONING IN GEAR CASE. SCREWS FURNISHED BY DRESSER-RAND.

18. 4 HOLES 3/4"-10 UNC-3B TAP FOR VERTICAL POSITIONING IN GENERATOR. SCREWS FURNISHED BY DRESSER-RAND.

19. 28 PROVISIONS FOR HORIZONTAL POSITIONING. 2 AT STEAM END SUPPORT, 8 AT EXHAUST END SUPPORT, 10 AT GEAR CASE AND 8 AT GENERATOR. 6 REMOVABLE BLOCKS WITH 1"-8 UNC SCREWS FURNISHED BY DRESSER-RAND.

20. SHIMS FURNISHED BY DRESSER-RAND.

21. ALLOW FOR GROUT.

22. 20 HOLES Ø 4.00, FOR GROUTING.

23. CUSTOMER TO PROVIDE ADEQUATE SUPPORT ALONG ALL BEAMS OR FOUNDATION TO BE SO BUILT AS TO SUPPORT ALL BEAMS.

24. 6 LIFTING LUGS PROVIDED. LUGS MUST BE USED FOR LIFTING UNIT.

25. PROVISION FOR LIFTING UPPER HALF OF TURBINE CASE ONLY.

26. THIS DIMENSION INCREASES BY 18.00 WHEN REMOVING UPPER HALF OF TURBINE CASE.

27. PROVISION FOR LIFTING UPPER HALF OF GEAR CASE ONLY.

28. THIS DIMENSION INCREASES BY 14.50 WHEN REMOVING UPPER HALF OF GEAR CASE.

29. HIGH SPEED COUPLING - AMERIGEAR FE 203 WITH A 8.00 D.B.S.E.

30. LOW SPEED COUPLING - AMERIGEAR FE 404 WITH A 5.00 D.B.S.E.

31. DISTANCE BETWEEN SHAFT ENDS.

32. DISTANCE BETWEEN SHAFT ENDS. THE TOLERANCE FOR THIS DIMENSION WITH THE TURBINE AND GEAR AT MID-FLOAT IS ±.005.

33. HIGH SPEED COUPLING GUARD.

34. LOW SPEED COUPLING GUARD.

35. CONTOUR OF STAINLESS STEEL JACKET - SHOWN IN PHANTOM.

36. PIPE CONNECTIONS TO EXTEND A MINIMUM OF 3.00 BEYOND JACKET.

37. HAND VALVES - 6 PROVIDED.

38. APPROXIMATE CENTER OF GRAVITY OF UNIT.

39. DISTANCE REQUIRED TO REMOVE MAIN OIL PUMP.

40. DISTANCE REQUIRED TO REMOVE IMMERSION HEATER.

41. CALCULATED THERMAL MOVEMENTS BASED ON A TRANSITION TO FULL LOAD FROM A COLD START AT 80°F.

42. SHAFT END GROWTH IS AWAY FROM DRIVEN MACHINE ON START-UP, BUT TOWARDS DRIVEN MACHINE AFTER STABILIZING (SEE NOTE 41).

43. SHAFT END RISE EQUALS .007(SEE NOTE 41).

44. DISTANCE REQUIRED TO REMOVE ROTOR ASSEMBLY.

45. 4 COVERED LIFTING SLOTS PROVIDED. 2 IN EACH END OF GENERATOR FOR LIFTING ENTIRE GENERATOR. A FOUR POINT LIFT IS REQUIRED.

46. PROVISION FOR LIFTING GENERATOR TOP COVER ONLY. DO NOT ATTEMPT TO LIFT THE ENTIRE GENERATOR USING THESE.

47. 4-OIL TANK CLEAN OUT HOLES, 1-EACH SIDE AND 2-ON TOP.

48. GENERATOR TERMINAL BOX.

49. DOWNWARD FORCES ARE CONSIDERED POSITIVE. UPWARD FORCES ARE CONSIDERED NEGATIVE. SHORT CIRCUIT TORQUE AS TABULATED IS FIVE TIMES NORMAL TORQUE FOR THE GENERATOR AND THREE TIMES NORMAL TORQUE FOR THE GEAR.

50. 2 PROVISIONS FOR RADIAL VIBRATION PROBES EACH BEARING CASE CAP, 3/4" PIPE TAP - PLUGGED.

51. 2-PROVISIONS FOR AXIAL VIBRATION PROBES IN STEAM END BEARING CASE COVER, 3/4" PIPE TAP - PLUGGED.

52. PROVISION FOR KEYPHASER STEAM END BEARING CASE COVER, 3/4" PIPE TAP PLUGGED.

53. NORMAL OPERATING OIL LEVEL.

54. ADD OIL AT THIS LEVEL.

55. SEE ALSO THE FOLLOWING DRAWINGS:
ELECTRICAL SCHEMATIC: E-6010371
ELECTRICAL LAYOUT: E-6010372
P&I DIAGRAM: A-6010549 & E-6010549
PIPING-GLAND CONDENSER: D-6011504
TRIP LOGIC DIAGRAM: D-6010373
GOVERNOR PROGRAM: E-6010374

IMPORTANT:
THIS DRAWING HAS BEEN RELEASED FOR PRODUCTION. ANY CHANGES MAY AFFECT PRICE AND DELIVERY.

SHEET 2 OF 2

CAD IDENT. NO.
OM150A/6010298D/,2/21

D	NO CHANGE THIS SHEET SEE SHEET 1 OF 2 — KLB 7/12/96, CK. KGB 7/12/96	C	NO CHANGE THIS SHEET SEE SHEET 1 OF 2 — KGB 6/10/96, CK. HLB 6/11/96
B	DELETED LATER FROM NOTES 38(CENTER OF GRAVITY), 41 & 43(THERMAL GROWTH), 44(REMOVAL FOR GEN. ROTOR) & 49(STATIC & DYNAMIC LOADING) — KGB 5/17/96, CK. HLB 5/21/96	A	ADDED SHEET 2 OF 2. — KGB 3/22/96, CK. RHS 4/1/96

E-6010372

SHEET 1 OF 2

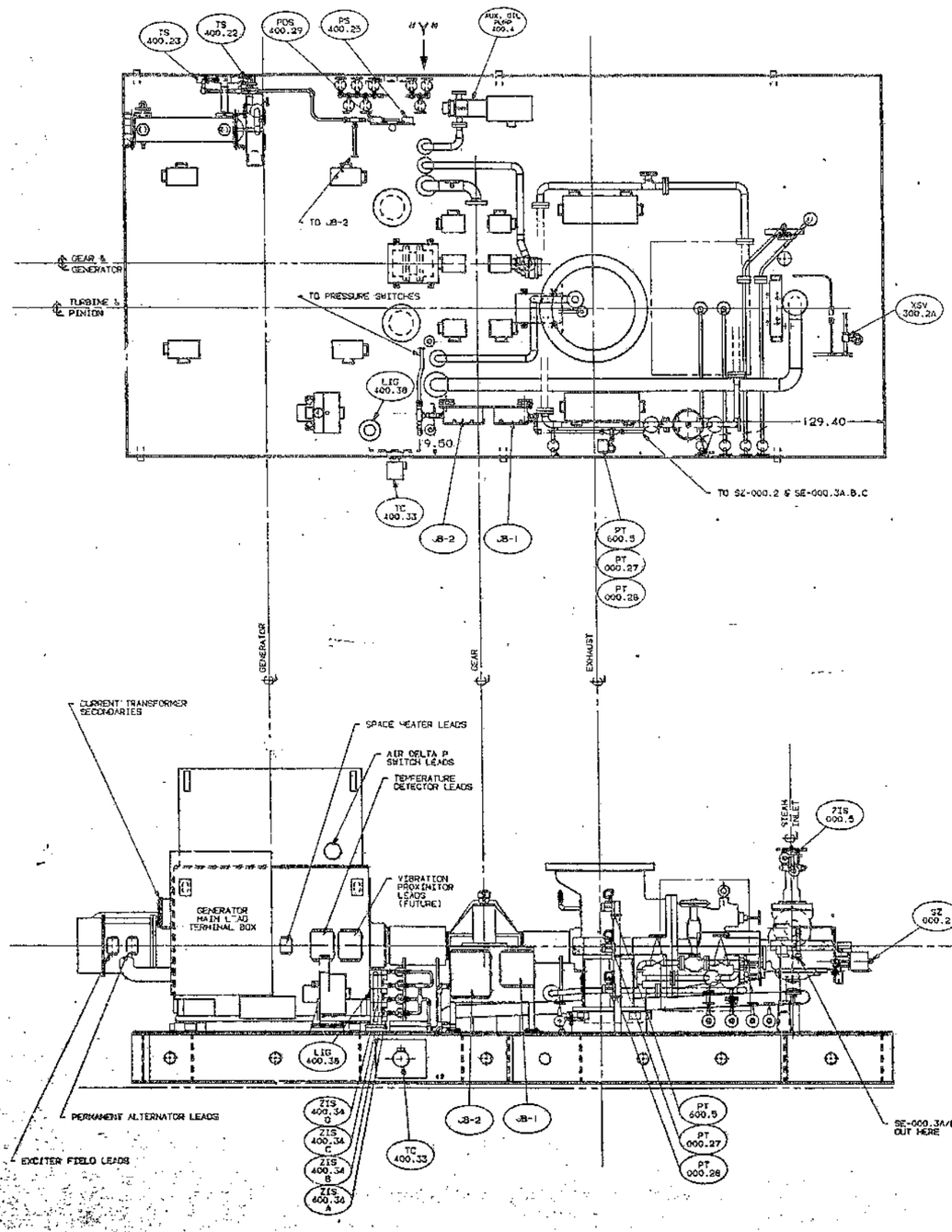

REFER TO IDEAL ELECTRIC DRAWINGS #14058-1442 & #0-72913

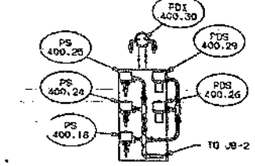

VIEW IN DIRECTION OF ARROW "Y"

JB-1 & JB-2 MOUNTING DETAIL

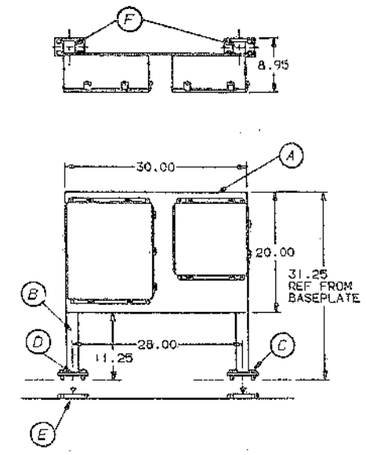

SHOP NOTES

1) THE PARTS FOR THIS MOUNTING ASSEMBLY CAN BE FOUND IN D-R SPEC #6010372-003.
2) PANEL BOARD BASE PAD TO BE WELDED TO SOLEPLATE. 3/16" SKIP WELD, 4-12. WELD PER W10.1-10.
3) ROUND ALL CORNERS ON MOUNTING PLATE.

(A) PLATE - 1/4 x 20 x 30 CC-162723-034, 1 REQUIRED

(B) 2 x 2" SQUARE TUBING - 30" LONG CB-232019-005, 2 REQUIRED

(C) 1/2-13 x 1-1/8" HEX HEAD BOLT CA-130472-002, 8 REQUIRED

(D) PANEL BOARD TOP PAD CB-232021-001, 2 REQUIRED

(E) PANEL BOARD BASE PAD CB-232020-001, 2 REQUIRED

(F) PLUG - 2 X 2" A-236947-001, 2 REQUIRED

NOTE:

ALL CONDUIT RUNS ARE SUGGESTED ONLY. FINAL ROUTING AND CONDUIT SUPPORT WILL BE DETERMINED ON FINAL ARRANGMENT BY ELECTRICIANS. TERMINAL BOXES WILL BE LOCATED AS SHOWN ON THIS DRAWING.

SHEET 1 OF 2

FORM "S" MULTISTAGE STEAM TURBINE
WITH
WOODWARD 505 ELECTRONIC GOVERNOR
DRIVING
2500 KW, 4,160 VOLTS, 3-PHASE, 60 HZ, .87 PF GENERATOR
THRU
FORM J-6 GEAR 5636/1800 RPM

APPROXIMATE WEIGHTS	LB
TURBINE	11,500
GEAR	7,025
GENERATOR	20,150
BASEPLATE (INCLUDING OIL)	18,500
ACCESSORIES	1,750
TOTAL	58,925
UPPER HALF OF TURBINE CASE	3,099
TURBINE ROTOR	1,600
GENERATOR ROTOR	4,250

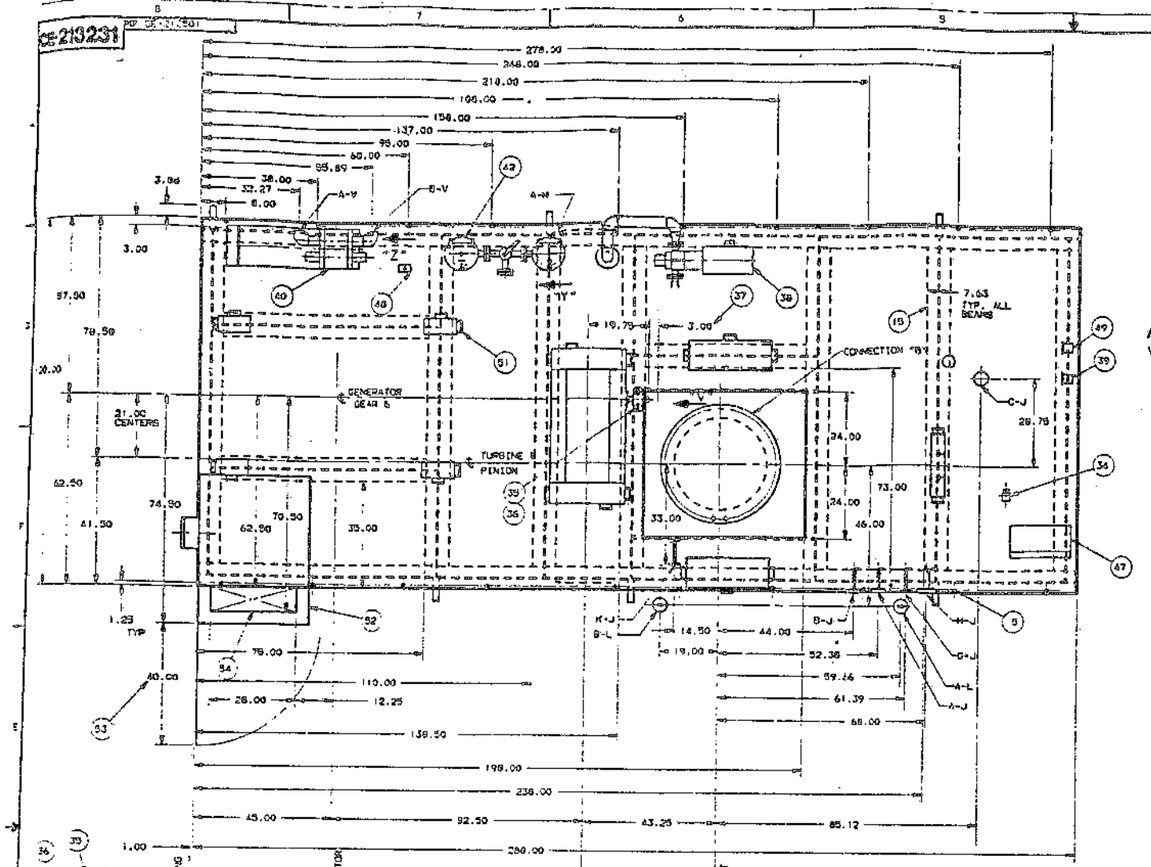

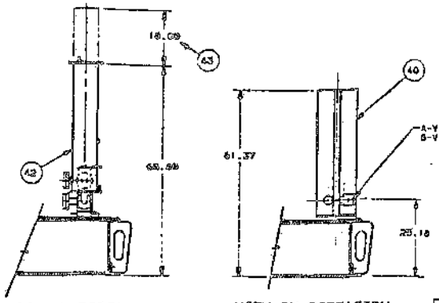

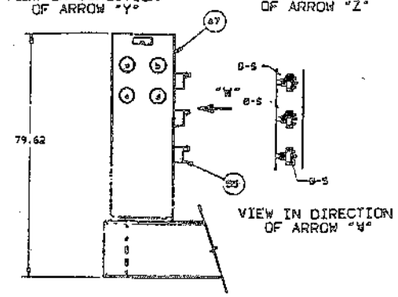

CUSTOMER'S MAJOR FLANGED CONNECTIONS									
	FLANGE	SIZE	ANSI	O.D.	B.C.	NO. HOLES	DIA. HOLES	MINIMUM THICKNESS	RAISED FACE	REMARKS
A.	TURBINE INLET	6	600	14.00	11.50	12	1.12	1.86	.25 X 9.50 DIA.	NOTES 1,2
B.	TURBINE EXHAUST	30	125	36.75	35.00	28	1.38	1.12	NONE	NOTES 1,7, 8

CUSTOMER'S AUXILIARY CONNECTIONS								
	CONNECTION	NO.	SIZE & TYPE	VALVE REQ'D.	VALVE SUPPLIED BY	PIPE TO	REMARKS
A-J	NOZZLE BOWL DRAIN	1	3/4-6000 ANSI R.F. FLANGE	YES	CUSTOMER	OPEN DRAIN	NOTE 29
B-J	FIRST STAGE DRAIN	1	3/4-6000 ANSI R.F. FLANGE	YES	CUSTOMER	OPEN DRAIN	NOTE 29
C-J	T & T VALVE ABOVE SEAT DRAIN	1	3/4-6000 ANSI R.F. FLANGE	YES	CUSTOMER	OPEN DRAIN	NOTE 29
D-J	T & T VALVE BELOW SEAT DRAIN	1	3/4-6000 ANSI R.F. FLANGE	YES	CUSTOMER	OPEN DRAIN	NOTE 29
E-J	T & T VALVE STEM LEAKOFF	1	3/4 PIPE TAP	NO		OPEN DRAIN	
F-J	GOVERNOR VALVE STEM LEAKOFF	1	3/4 PIPE TAP	NO		OPEN DRAIN	
G-J	STEAM END PACKING CASE DRIP DRAIN	1	3/4-1500 ANSI R.F. FLANGE	NO		OPEN DRAIN	NOTE 29
H-J	STEAM END PACKING CASE ATMOSPHERIC LEAKOFF	1	1-1/2-3000 ANSI R.F. FLANGE	YES	CUSTOMER	OPEN DRAIN	NOTE 29
K-J	EXHAUST END PACKING CASE DRIP DRAIN	1	3/4-1500 ANSI R.F. FLANGE	NO		OPEN DRAIN	NOTE 29
A-L	STEAM END PACKING CASE SEALING STEAM SUPPLY	1	3/4-3000 ANSI R.F. FLANGE	YES	DRESSER-RAND		NOTE 29.50
B-L	EXHAUST END PACKING CASE SEALING STEAM SUPPLY	1	3/4-3000 ANSI R.F. FLANGE	YES	DRESSER-RAND		NOTE 29.50
A-H	OIL TANK DRAIN	1	3/4 PIPE TAP				PLUGGED
A-V	OIL COOLER COOLING WATER INLET	1	2-1/2 PIPE TAP	YES	CUSTOMER		NOTE 41
B-V	OIL COOLER COOLING WATER OUTLET	1	2-1/2 PIPE TAP	NO			
A-S	VALVEX ACTUATOR AIR SUPPLY	1	1/4 PIPE TAP			CUSTOMER'S 30 PSIG AIR SUPPLY	NOTE 56
B-S	AIR SUPPLY TO SOLENOID HAND VALVE	3	1/4 PIPE TAP	NO			NOTE 59
B-T	PROVISION FOR KEYPHASOR	1	3/4" PIPE TAP				PLUGGED

LIST OF GAUGES		
GAUGE	DIAL SIZE	DESCRIPTION
a	4.50	INITIAL STEAM PRESSURE
b	4.50	NOZZLE BOWL
c	4.50	FIRST STAGE PRESSURE
d	4.50	EXHAUST PRESSURE
e		NAMEPLATE

IMPORTANT:
THIS DRAWING HAS BEEN RELEASED FOR PRODUCTION. ANY CHANGES MAY AFFECT PRICE AND DELIVERY.

NOTICE:
THIS DRAWING AND ALL INFORMATION HEREON IS THE PROPERTY OF DRESSER-RAND AND IS TO BE CONFIDENTIAL AND MUST NOT BE MADE PUBLIC OR COPIED. IT IS SUBJECT TO RETURN ON DEMAND.

IDEAL ELECTRIC CO.
330 EAST FIRST STREET • MANSFIELD, OHIO 44902 • USA
TELEPHONE (419) 522-3611 • FAX (419) 522-3380

SYNCHRONOUS GENERATOR DATA

	KW	2500	KVA	2941	P.F.	0.85
105 °C RISE	VOLTS	4160	AMPS	408	RPM	1800

REACTANCES

PER UNIT ON 2941 kVA BASE

Direct Axis Synchronous	(Unsaturated)	Xd	1.729
Direct Axis Transient	(Rated Voltage)	X'd	0.239
Direct Axis Subtransient	(Rated Voltage)	X"d	0.167
Quadrature Axis Synchronous	(Unsaturated)	Xq	0.899
Quadrature Axis Subtransient	(Rated Voltage)	X"q	0.163
Negative Sequence	(Rated Voltage)	X2	0.170
Zero Sequence	(Rated Voltage)	Xo	0.065
Short Circuit Ratio		SCR	0.750

TIME CONSTANTS

Direct Axis Open Circuit Transient	T'do	3.710 Sec.
Direct Axis Short Circuit Transient	T'd	0.512 Sec.
Direct Axis Short Circuit Subtransient	T"d	0.030 Sec.
Short Circuit Armature	Ta	0.041 Sec.

RESISTANCES

Armature	(per phase at 25°C)	0.04495 Ohms
Field	(at 25°C)	0.484 Ohms
Rotor Inertia		2200 Lb-Ft²

EFFICIENCY

Load	Eff. at 0.85 P.F.
4/4	96.2%
3/4	96.1%
1/2	95.4%

DRESSER-RAND

SCOPE OF SUPPLY

Generator Control & Switchgear Cubicle

One (1) Generator Control & Switchgear Cubicle, 2500 KW, 0.85 PF, 4160V, 3P, 4W, 60 Hz, ANSC 37, Indoor Construction with Approximate Dimensions of 94"H, 72"W, 90"D to include:

- Generator CB, Vacuum, 4160V, 3P, 1200A, EO, DO, 350MVA
- Surge Protection Arrestor, 4160V, 3P
- AC Instrumentation: Electronic Multimeter to Include AM, VM, FM, KW, KVAR, KWH, KVARH, PF, 1% Class - Utility Grade
- RTD Monitor Relay - Two (2) Channel with Temperature Meter & Channel Selector Switch
- Control & Synchronizing Panel to include:
    - Annunciator, 12 Point, with Ringback Control Logic, Reset, PB, Silence PB, Lamp Test PB, & Horn
    - Sync Scope
    - Sync Lights
    - Sync Switch
    - Voltage Adjust Potentiometer
    - Speed Adjust Up/Down Switch
    - Mode Control Switches
- Device 15V - Electronic Synchronizer with 5% Voltage Match, SPMA
- Device 90PF - VAR-Power Factor Controller, Type SCP250
- Device 51V - Phase Overcurrent Relay with Voltage Restraint
- Device 51N - Ground Overcurrent Relay
- Device 87 - Phase Differential Current Relay with Six (6) Cts
- Device 86 - Lockout Relay
- Device 32 - Reverse Power Relay
- Device 40 - Reverse VAR, Loss of Excitation Relay
- Device 46 - Negative Sequence Current Relay, 3P
- Circuit Breaker Control Switch with R/G Indicating Lights
- Two (2) Sets of Potential Transformers with Fusing
- Three (3) Sets of Current Transformers with Shorting Blocks
- Mount/Wire Speed Governor Equipment Furnished by Customer
- Mount/Wire Voltage Regulating Equipment Furnished by Customer
- Transition Section for Connection to Bus Bar
- Station Battery & Charger, 48VDC, Powered from Separate 120 Volt Source Provided by Others
- Space Heater & Humistat Control Powered from Separate 120 Volt Source Provided by Others

Condenser

One (1) Graham or Equal Condenser System in accordance with the Attached Seven (7) Vendor Information Sheets.

REV.	ZONE	CHANGE DESCRIPTION	BY
		3/21/96	
A	C7	4-10-96 PER ECN 19343	RM

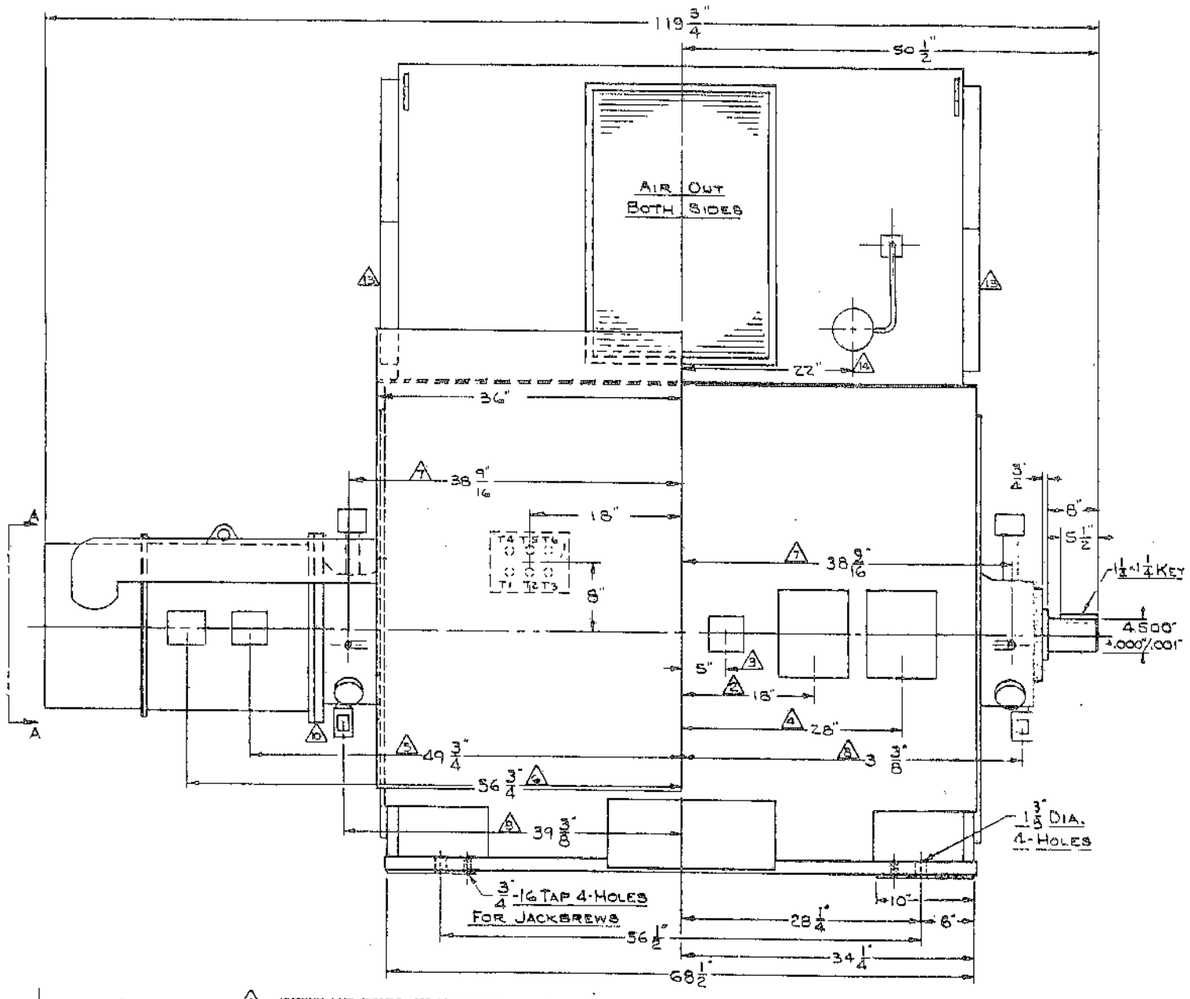

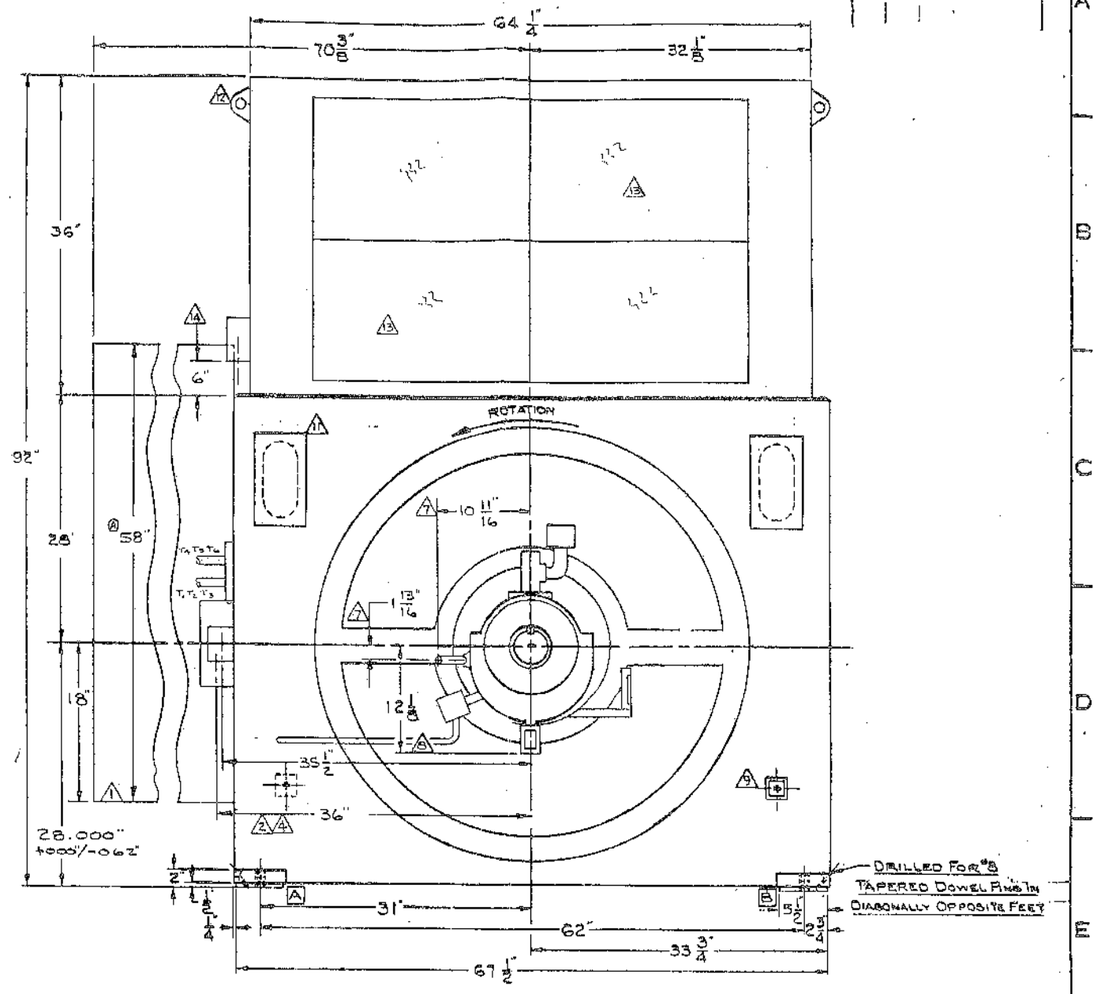

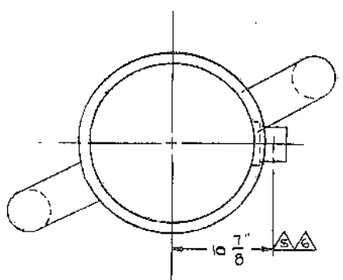

VIEW A-A

1. INCOMING LINE CUBICLE, SEE DRAWING 14DSB-1442.
2. ONE HOLE FOR 1-1/2" CONDUIT FOR STATOR TEMPERATURE DETECTORS, AND BEARING TEMPERATURE DETECTORS.
3. ONE HOLE FOR 1" CONDUIT FOR SPACE HEATER LEADS.
4. ONE HOLE FOR 1-1/2" CONDUIT FOR (4) VIBRATION PROXIMITORS, (2) FOR EACH BEARING.
5. ONE HOLE FOR 1" CONDUIT FOR PERMANENT ALTERNATOR LEADS.
6. ONE HOLE FOR 1-1/2" CONDUIT FOR EXCITER FIELD LEADS.
7. ONE HOLE FOR 1/2" N.P.T. MALE THREAD, OIL SUPPLY, ONE PER BEARING.
8. ONE HOLE FOR 1-1/4" N.P.T. FEMALE THREAD, OIL RETURN, ONE PER BEARING.
9. GROUNDING PADS - 5/16"-18 TAPPED HOLE LOCATED DIAGONALLY OPPOSITE OF EACH OTHER.
10. THIS BEARING IS INSULATED FROM GROUND, AND CONNECTION MUST BE INSULATED TO PRESERVE THE INTEGRITY OF THE INSULATION.
11. COVERED LIFTING SLOTS BOTH ENDS FOR LIFTING ENTIRE MACHINE. A FOUR POINT IS REQUIRED.
12. LIFTING LUGS FOR TOP COVER ONLY. DO NOT ATTEMPT TO LIFT ENTIRE MACHINE.
13. ALUMINUM AIR INTAKE FILTERS EACH END.
14. ONE HOLE FOR 1/2" CONDUIT FOR AIR PRESSURE DIFFERENTIAL SWITCH LEADS.

QUANTITY: 1

TYPE "SAB" HORIZONTAL BRUSHLESS SYNCHRONOUS GENERATOR RATED AS FOLLOWS:

2941 KVA, 2500 KW, .85 PF, 1800 RPM, 3 PHASE, 60 HZ, 4160 VOLTS, 6 LEADS, WYE CONNECTED, 105°C RISE BY RESISTANCE ABOVE A 40° C AMBIENT, CONTINUOS DUTY, CLASS "F" INSULATION, 21120-18 FRAME.

CLOCKWISE SHAFT ROTATION FACING OPPOSITE DRIVE END OF UNIT WILL PRODUCE PHASE SEQUENCE OF T1-A, T2-B, T3-C.

	STATIC LOADS	FULL LOAD TORQUE	SHORT CIRCUIT TORQUE
A	8643 LBS. ±	10869 LBS. ±	28,258 LBS. ±
B	8643 LBS. ±	6,415 LBS. ±	10,973 LBS. ±

BEARING OIL REQUIREMENTS

VISCOSITY ---------- 100 S.S.U. @ 100°F
PRESSURE ---------- 20 P.S.I.
FLOW ---------- .46 G.P.M.
MAXIMUM OIL IN TEMP -- 140°F
LOSSES ---------- 1516 BTU/HR/BRG

ESTIMATED WEIGHTS

ROTOR ----- 3,785
STATOR ----- 13,500
TOTAL ----- 17,285

PR = 5284 XH PER ELECTRICAL PORTION
WR^2 = 24301.4 FT²

D-72913

R.B.P. | INSP. | DEPTA

1 2 3 4 5 6 7 8

REV	DESCRIPTION	BY
0	FEBRUARY 26,1996	RAWS
1	MARCH 18,1996 ADDED CT1-3 & CCCT. CHANGED DCT TYPE FROM RCI TO SCP. CHANGED DWG. NO. FROM 14CSB-1581 TO 14DSB-1442	HM
2	MARCH 27,1996 TOOK GROUND OFF OF DCT'S	HM
3	APRIL 9,1996 ADDED "NGR" TO WIRING DIAGRAM	RAWS

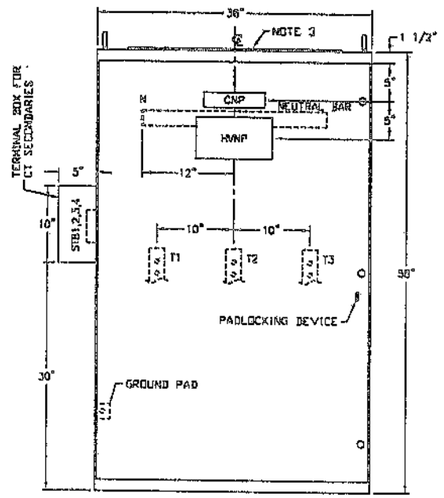

FRONT VIEW

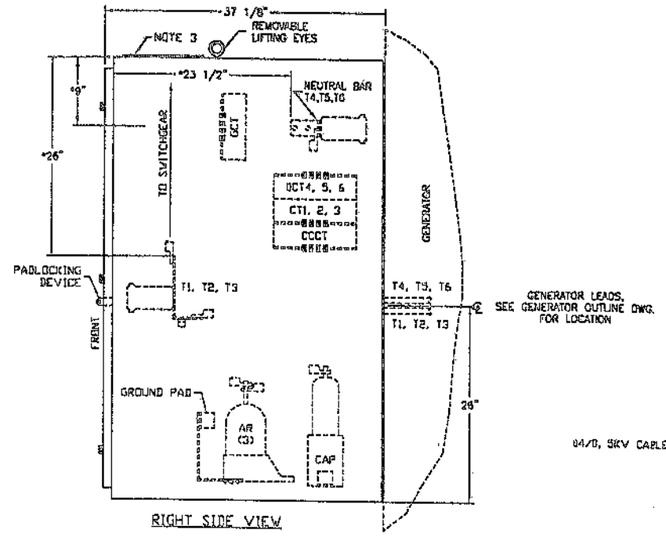

RIGHT SIDE VIEW

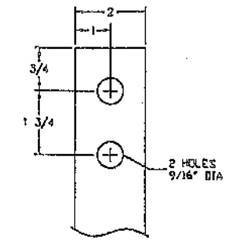

ENLARGED VIEW OF CUSTOMER TERMINATIONS BOLT HOLE SPACING.

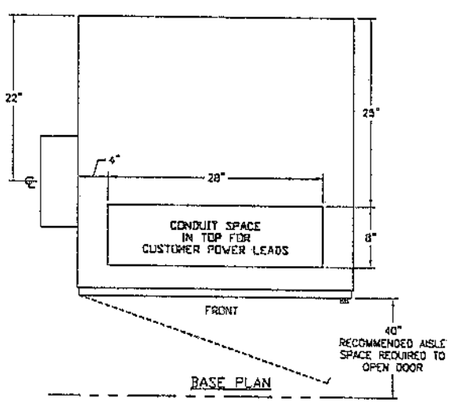

BASE PLAN

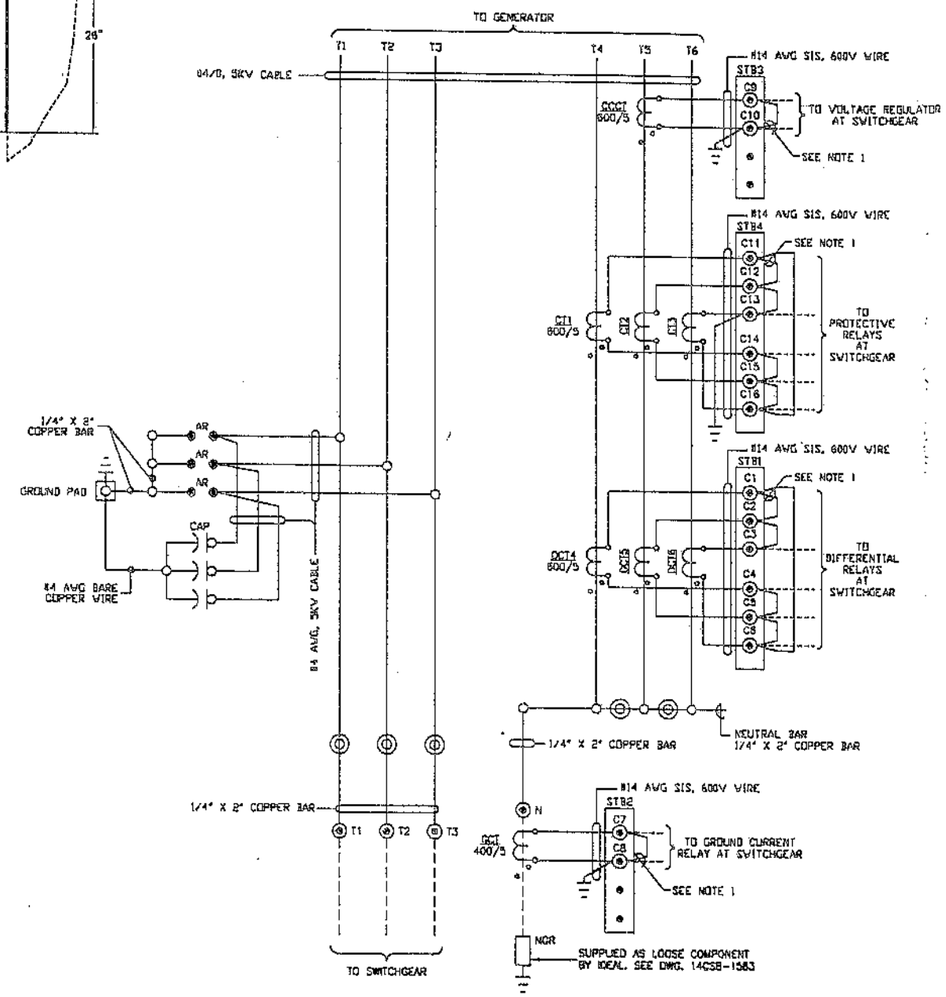

WIRING DIAGRAM

DEVICE LEGEND

AR SURGE ARRESTER, GENERAL ELECTRIC, 5.1KV. CAT #9L11XGB005

CAP SURGE CAPACITOR, GENERAL ELECTRIC, 4160V, 3 PHASE. CAT #16L190J

CCCT CROSS CURRENT COMPENSATION TRANSFORMER, ASEA BROWN BOVERI, TYPE SCP-3,RATIO 600/5. CAT #962BA07G08

CNP COMPANY NAMEPLATE

CT, DCT CURRENT TRANSFORMER, ASEA BROWN BOVERI, TYPE SCP-2, RATIO 600/5. CAT #962BA06G08

GCT GROUND CURRENT TRANSFORMER, ASEA BROWN BOVERI, TYPE SCO, RATIO 400/5. CAT #7326A83G03

HVNP HIGH VOLTAGE NAMEPLATE

NGR NEUTRAL GROUNDING RESISTOR, POST GLOVER 2400V (L-N), 400 AMPS, 6 OHMS

STB SHORTING TERMINAL BLOCK, GENERAL ELECTRIC, TYPE EB27

NOTES

(1) CUSTOMER TO REMOVE APPROPRIATE JUMPERS WHEN CONNECTIONS ARE MADE. GROUND COMMON SIDE, EXCEPT FOR DCT'S (GROUND AT SWITCHGEAR).

(2) INDOOR ENCLOSURE.

(3) REMOVABLE COVER PLATE, PURCHASER TO DRILL FOR CONDUIT ENTRANCE.

(4) ⊛ INDICATES TERMINAL FOR CUSTOMER CONNECTION.

(5) ALL WIRING SHOWN DOTTED ON WIRING DIAGRAM TO BE SUPPLIED BY OTHERS.

(6) # INDICATES APPROXIMATE DIMENSIONS.

(7) WEIGHT APPROXIMATELY 1300LBS.

CAUTION:

ANY INSTALLATION, OPERATION, INSPECTION OR MAINTENANCE OF THE EQUIPMENT COVERED BY THIS DOCUMENT MUST BE PERFORMED BY QUALIFIED PERSONS WHO ARE THOROUGHLY TRAINED AND WHO UNDERSTAND ANY HAZARD THAT MAY BE INVOLVED. THIS DOCUMENT HAS BEEN PREPARED ONLY FOR SUCH QUALIFIED PERSONS AND IS NOT INTENDED TO BE A SUBSTITUTE FOR ADEQUATE TRAINING AND EXPERIENCE IN SAFETY PROCEDURES FOR THIS TYPE OF EQUIPMENT. BEFORE PERFORMING THE OPERATIONS DESCRIBED IN THIS DOCUMENT THE NECESSARY SAFETY PROCEDURES RELATIVE TO THIS TYPE OF EQUIPMENT MUST BE CARRED OUT.

graham
Vacuum and Heat Transfer

SCOPE OF SUPPLY

Vendors and model numbers are listed to illustrate construction features. Graham reserves the right to substitute equipment of an equal type and quality by other vendors. Any items omitted from this scope of supply list are excluded from this quotationat this time and will not be furnished.

SURFACE CONDENSER TUBED IN SHOP
(1) Model 38 51 / 17.00 TALTD

STEAM JET AIR REMOVAL PACKAGE
(1) Model 1-32-088-2

LIQUID RING VACUUM PUMP AIR REMOVAL PACKAGE
(1) Model 1PV62160/12

ATMOSPHERIC RELIEF VALVE
(1) Viking 24" Vertical Carbon Steel

HOGGING EJECTOR
(1) Graham, 2H Cast Iron
Silencer, Maxim,Model 2" FP Crb.Stl,Internals, Flg./w F.G. Pack

HOTWELL GAUGE GLASS
(1) Consolidated #20-207, Bronze tubular

VACUUM GAUGE(S)
(1) U.S. Gauge #1981, 4-1/2", 316SS tube, PET case, 316SS Lower stem

PRESSURE GAUGE(S)
(1) U.S. Gauge #1981, 4-1/2", 316SS tube, PET case, 316SS Lower stem
(1) Pigtail Syphon, U.S. Gauge, 517H 1/2" Carbon Steel

TEMPERATURE INDICATORS
(2) U.S. Gauge 65300674 5" Dial Every angle 304SS case
(2) U.S. Gauge Thermowell No. 3/4"-2605-U4.5-304SS, 3/4" NPT, 304SS

AIR LEAKAGE METER
(1) Graham, Calibrated Orfice with gauge, 0 - 40 PPH

INTERCONDENSER CONDENSATE TRAP
(1) Sarco ASTM A126, Type-FA30, 1"

AFTERCONDENSER CONDENSATE TRAP
(1) Sarco ASTM A126, Type-FA30, 1"

graham
Vacuum and Heat Transfer

SURFACE CONDENSER SPECIFICATIONS

Absolute Pressure @ Steam Inlet (in.HgA)	3.00
Steam Condensed (lb./hr.)	43000.
Heat Rejected (Btu/hr.)	38829000.
Circulating Water (gpm)	3883.
Water Inlet / Outlet (deg.F)	85.00 / 105.00
Water Pressure Loss : (ft.Water / psi)	15.0 / 6.5
Percent Clean	85.
Tube Velocity (fps)	7.63

DESIGN

	MODEL :	38 51 / 17.00 TALTD
Surface Area (sq.ft.) Total / Effective		3271. / 3208.
Number of Water Passes		2.
Number of Tubes		980.
Outside Tube Diameter (in.) - BWG		0.7500 - 18 AW
Total Tube Length (ft.)		17.00
Design / Test Pressure (psig) :	Shell FV&	15.0 /Flooded
	Tubes	125.0 / 187.5
Design Temperature (deg.F) :	Shell	250.0
	Tubes	125.0
Hotwell : cylindrical ...supply (gal.)		220.
Steam Inlet Diameter (in.) (FF)		40.
Water Connections (in.)		2. - 20.
Condensate Outlet (in.)		1. - 6.0

MATERIALS

Shell	(SA-516-70)	Carbon Steel
Water Boxes	(SA-516-70)	Carbon Steel
Water Box Covers	(SA-516-70)	Carbon Steel
Baffles	(SA-516-70)	Carbon Steel
Tube Support Plates	(SA-36)	Carbon Steel
Tubes	(SB-111-443)	Admiralty
Tube Sheets	(SB-171-464)	Naval Rolled Brass

Remarks : Design per HEI, Ninth Edition
Construction and Stamp per ASME Section VIII , Div. 1 , Tube Side Only
Steam Inlet Impingement Protection Included
Water Boxes and Covers to be Coal Tar Epoxy Coated
Ejector Package Mounted on the Main Condenser

graham
Vacuum and Heat Transfer

STEAM JET EJECTOR PERFORMANCE:

Pressure maintained (inches HgA)*	1.0
Total Fluid Evacuated (lbs/hr)	43.2
Dry air evacuated (lbs/hr)	13.5
Motive steam required per element (lbs/hr)	195.0
Operating steam pressure (psig)	175.0
Operating steam temperature (deg.F)	377.0
Inter condenser cooling water temp. (deg.F)	85.0
Inter condenser cooling water required (gpm)	59.3
Cooling water pressure drop thru I/A condenser (psi)	0.7

STEAM JET EJECTOR DESIGN:

Model designation		1-32-088-2/2H
Number of stages		TWO
Number of elements for parallel operation		ONE
Material of diffuser and suction chamber		SA-278-35
Material of steam nozzles		416SS
Type of inter and after condenser		IN-LINE
Material of inter and after condenser shell		SA-53-B
Tube sheets		SA-516-70
Tubes	0.7500 - 18 BWG AW	SB-111-443

M.A.W.P/ Test Pressure (psig)	:	Shell	20 / 30
		Tubes	125 / 188
Design Temperature (deg.F)	:	Shell	250
		Tubes	125

APPURTENANCES INCLUDED:

Steam strainer	Included
Interconnecting steam piping	Included
Air leakage meter	Included
Priming ejector - Size	2H(7C)
Steam consumption (lbs/hr)	375.0
Drainers or traps	Included
Design per HEI Construction of I/AC per ASME Sec. VIII Div I	
Isolation valve(s) at 1st stage discharge	Included
Isolation valve at hogger suction	Included
Suction Manifold	Included
Hogging Ejector silencer	Included
Motive steam stop valve for each jet	Included

Measured at condenser inlet.

graham
Vacuum and Heat Transfer

LIQUID RING PUMP SPECIFICATION SHEET

1 CUSTOMER: _____ EG NO : _____
2 USER : _____ JOB NO : _____
3 PLANT LOCATION : _____ CUST NO : _____
4 SERVICE OF UNIT: _____ DATE : 10/09/95
Engineer: KGG

PERFORMANCE REQUIREMENTS

5 GAS HANDLED: AIR/WATER VAPOR
6 SUCTION PRESSURE: 50.0 mmHgA SUCTION TEMPERATURE: 93.6 F
7 SEALANT FLUID: WATER SEALANT TEMPERATURE: 80.0 F
8 COOLING WATER TEMP: N.A. F SOURCE: _____
9 ELECTRIC SUPPLY: VOLTS: 230/460 PHASE: 3 CYCLE: 60

PUMP SELECTION

10 MODEL NO: 1PV62160/12
11 STAGES: two SHAFT SEAL: packing glands
12 MAT'L OF CONSTR: cast iron case, ductile iron rotors, SS shaft
13 SPEED: 1750 RPM DISCHARGE PRESS: 14.7 psia
14 CAPACITY: 330.7 ACFM AT SUCTION PRESSURE OF: 50.0 mmHgA
15 HORSEPOWER-AT OPERATING POINT: 26.4 bhp MAXIMUM: _____
16 SEAL LIQUID: WATER QUANTITY: 20.0 GPM TEMP: 80.0 F
17 FLOW: once through

MOTOR DETAILS

18 HORSEPOWER: 40 hp SPEED: 1750 rpm
19 ELECTRIC SUPPLY: VOLTS: 230/460 PHASE: 3 CYCLE: 60
20 ENCLOSURE: ODP
21 MAKE: Reliance or Equal
22 SPECIAL FEATURES: _____

OPTIONAL ACCESSORIES

23 BASEPLATE: included for LRVP and motor only
24 COUPLING & GUARD: included, T.B. Woods or equal
25 DISCHARGE SEPARATOR: included, steel
26 SEAL WATER REGULATING VALVE: included, bronze
27 SEAL WATER PRESSURE GAUGE: included
28 SEAL WATER SOLENOID VALVE: included, brass
29 VACUUM GAUGE: included
30 VACUUM RELIEF VALVE: included, aluminum
31 SEAL WATER STRAINER: included, cast iron
32 SEAL WATER SHUTOFF VALVE: included, brass
33 INLET CHECK VALVE: included, bronze
34 RECIRCULATION PUMP: none
35 HEAT EXCHANGER: none
36 INTERCONNECTING PIPING: included
37 MANUAL DRAIN AND FILL VALVES: included
38 GAUGE GLASS: included Bronze 3/4" glass diam
39 COMMENTS: Performance tolerance per HEI.
40
41
42
43
44

Graham Manufacturing Co., Inc., P.O. Box 719, Batavia, NY 14021-0719
Corporate and Sales Headquarters: 20 Florence Avenue, Batavia, NY 14020
Tel. (716) 343-2216 Telex: (71) 6854142 Fax No. (716) 343-1097

*** PRELIMINARY DRAWING NOT CERTIFIED FOR CONSTRUCTION ***

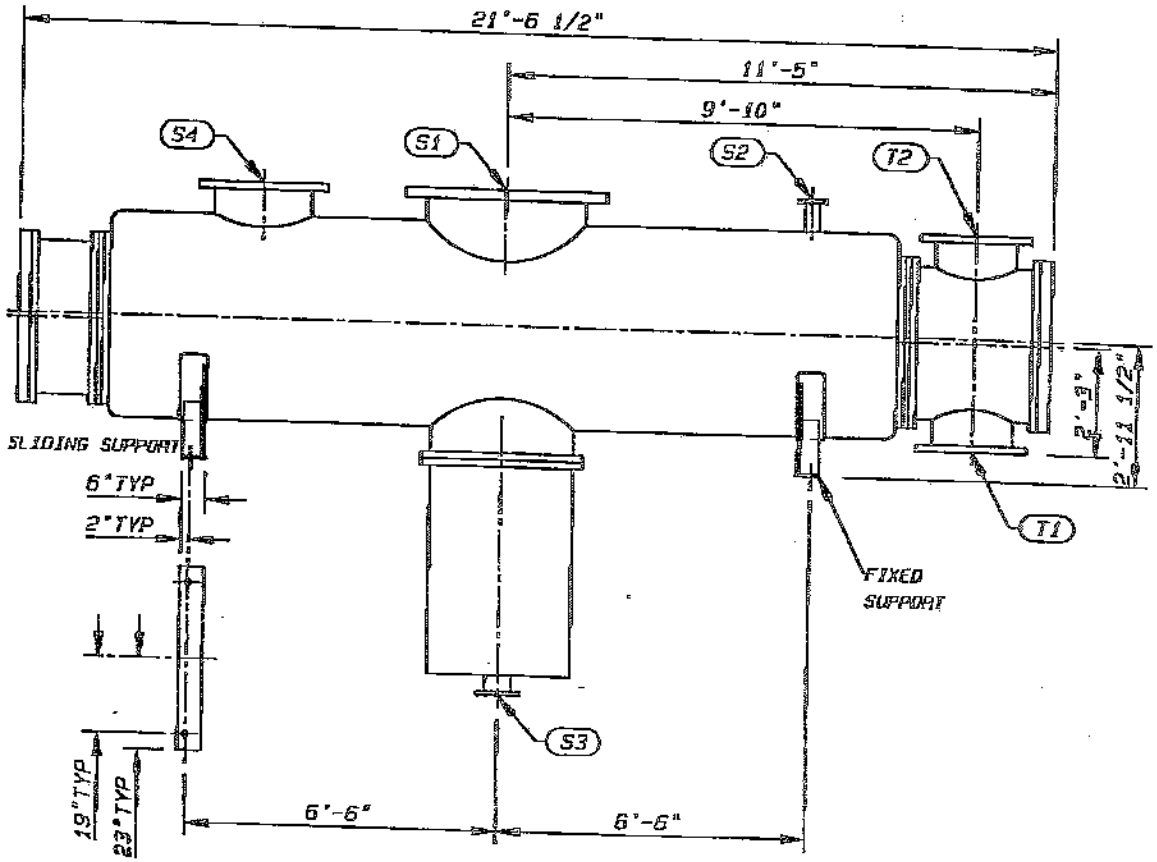

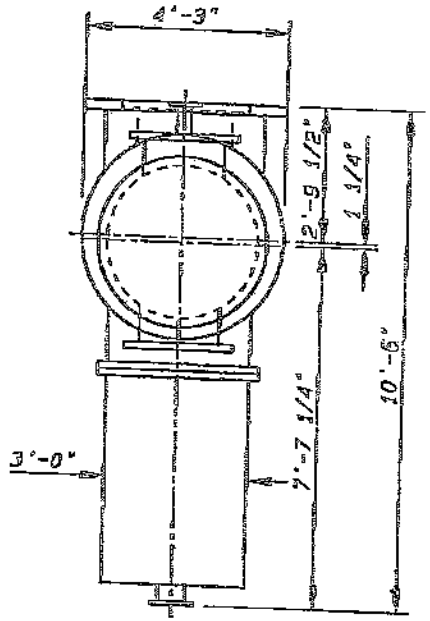

NOTE:
CONNECTION FLANGES ARE ANSI STANDARD DRILLING AND THICKNESS UNLESS OTHERWISE NOTED.
CUSTOMER TO SPECIFY COOLING WATER NOZZLE ARRANGEMENT.
STEAM INLET FLANGE THICKNESS PER HEI.
SLIDING SUPPORT: (2) 1 1/8" x 1 1/2" SLOTTED HOLES.
FIXED SUPPORT: (2) 1-1/8" DIA. HOLES.

GRAHAM MANUFACTURING

T1	20"	150# RF COOLING WATER INLET	CUSTOMER			
T2	20"	150# RF COOLING WATER OUTLET	CUSTOMER REF			
S1	40"	FF STEAM INLET	MODEL		TO	
S2	3"	150# RF AIR OFF TAKE		M.A.W.P.	TEST PRESS.	DESIGN TEM.
S3	6"	150# RF CONDENSATE OUTLET	SHELL SIDE	FV 15 PSIG	23 PSIG	250 F
S4	24"	150# RF RELIEF VALVE	TUBE SIDE	125 PSIG	188 PSIG	125 F

*** PRELIMINARY DRAWING NOT CERTIFIED FOR CONSTRUCTION ***

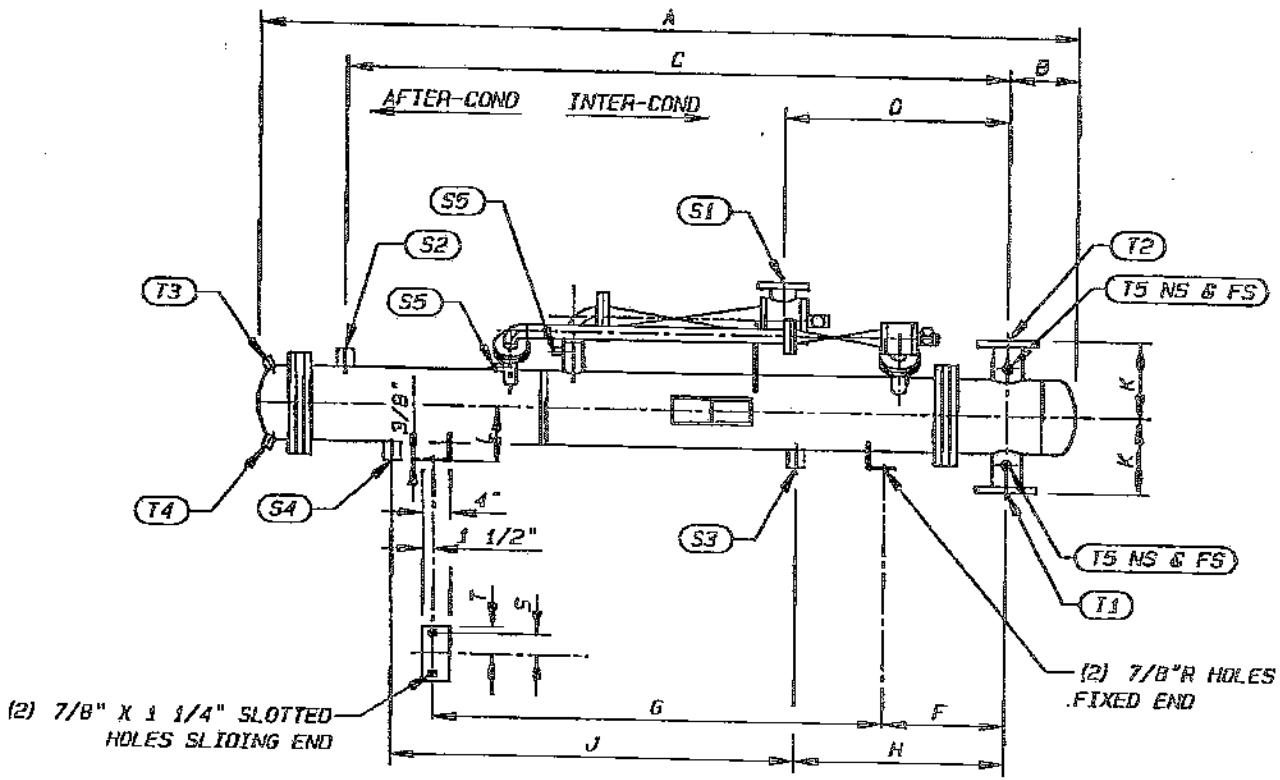

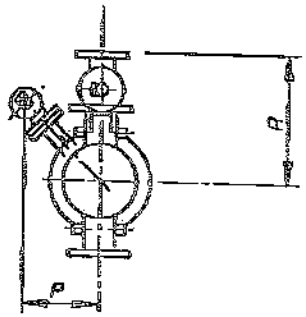

NOTE:
CONNECTION FLANGES ARE ANSI STANDARD DRILLING AND THICKNESS UNLESS OTHERWISE NOTED.

CUSTOMER
CUSTOMER REF
MODEL

CONNECTION SCHEDULE S=SHELL SIDE T=TUBE SIDE

SYMBOL	SIZE	TYPE	SERVICE
S1	3"	150# ANSI (FF)	VAPOR INLET
S2	1 1/2"	NPT	VAPOR OUTLET
S3	1 1/2"	NPT	CONDENSATE OUTLET
S4	1 1/2"	NPT	CONDENSATE OUTLET
S5	1/2"	NPT	TEST CONN.
T1	3"	150# ANSI (RF)	WATER INLET
T2	3"	150# ANSI (RF)	WATER OUTLET
T3	3/4"	NPT	VENT
T4	3/4"	NPT	DRAIN
T5	3/4"	NPT	TEST CONN.

DIMENSIONS

A	B	C	D	F	G	H	J
9'-8"	9 3/16"	8'-0"	2'-9"	17"	5'-6"	2'-6"	4'-11"

K	L	P	Q	R	S	T
10"	7"	10 5/16"		18 9/16"	2"	3"

	SHELL SIDE	TUBE SIDE
M.A.W.P (PSIG)	20	125
TEST PRESS (PSIG)	30	188
DESIGN TEMP (°F)	250	125

GRAHAM MANUFACTURING CO. INC.

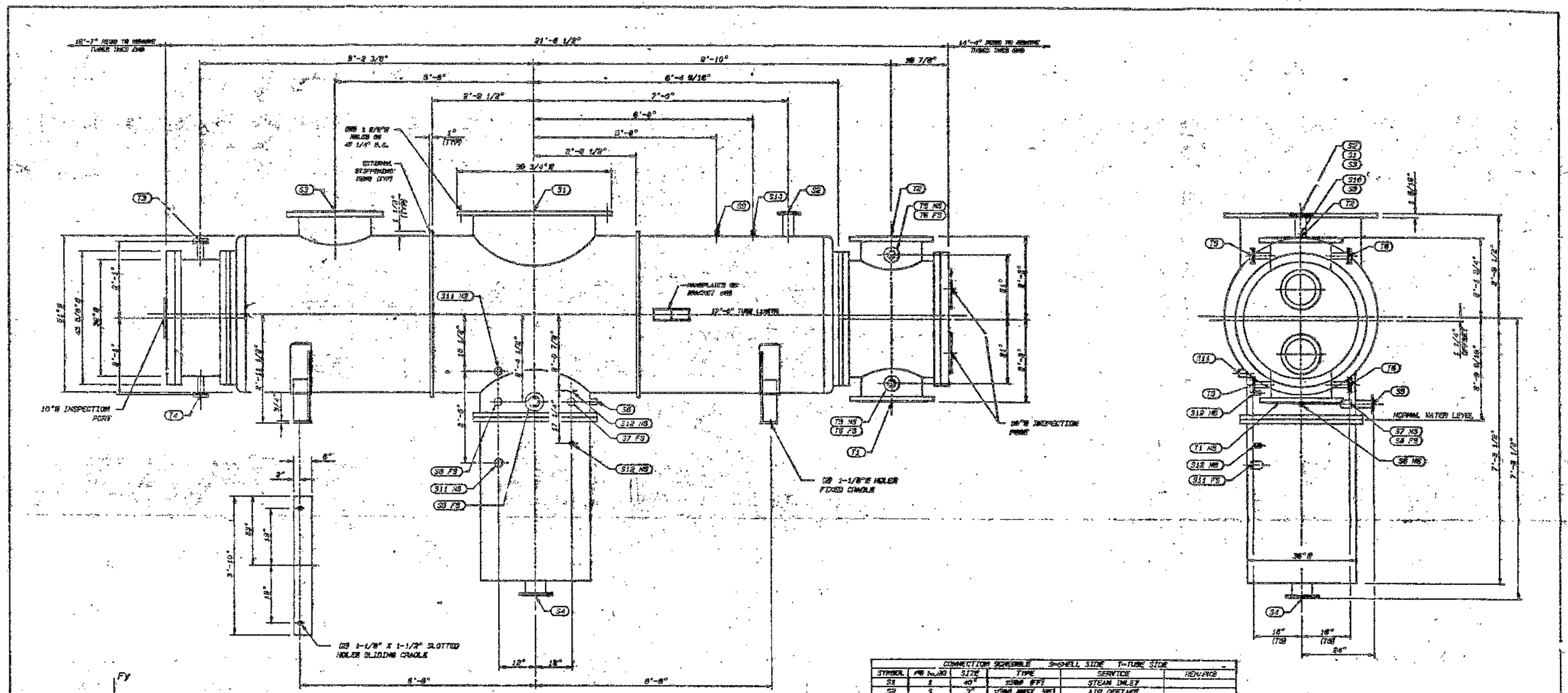

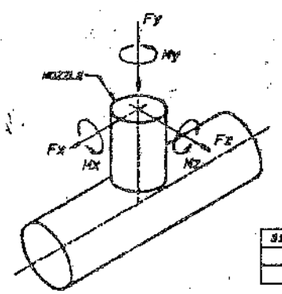

MAX. NOZZLE LOADING FOR INDICATED CONN'S						
	FORCES (LBS)			MOMENTS (FT-LBS)		
	Fx	Fy	Fz	Mx	My	Mz
S1	1770	1770	1770	10427	25498	10427

	CONNECTION SCHEDULE S=SHELL SIDE T=TUBE SIDE				
SYMBOL	PRS lbs/in2	SIZE	TYPE	SERVICE	REMARKS
S1	1	40"	150# (RF)	STEAM INLET	
S2	1	2"	150# ANSI (RF)	AIR OFFTAKE	
S3	1	24"	150# ANSI (RF)	A.R.V.	
S4	1	8"	150# ANSI (RF)	CONDENSATE OUTLET	
S5	1	2"	150# ANSI (RF)	RECYCLE	
S6	1	1"	NPT (3000#)	RAW WATER STARTUP	
S7	1	1 1/2"	NPT (3000#)	CONDENSATE INLET	FROM I.C. TRAP
S8	1	1 1/2"	NPT (3000#)	CONDENSATE INLET	FROM A.C. TRAP
S9	2	1/2"	NPT (3000#)	VACUUM GAUGE	
S10	1	3/4"	NPT (3000#)	PUMP VENT	
S11	2	1 1/2"	NPT (3000#)	LIQUID LEVEL CONTROL	
S12	2	3/4"	NPT (3000#)	GAUGE GLASS	
T1	1	20"	150# ANSI (RF)	WATER INLET	
T2	1	20"	150# ANSI (RF)	WATER OUTLET	
T3	1	1 1/2"	150# ANSI (RF)	VENT	W/BLIND FLANGE
T4	1	1 1/2"	150# ANSI (RF)	DRAIN	W/BLIND FLANGE
T5	2	1 1/2"	150# ANSI (RF)	PRESSURE INDICATOR	W/BLIND FLANGE
T6	2	1 1/2"	150# ANSI (RF)	THERMOMETER	W/BLIND FLANGE

NOTES:

1) BOLT HOLES STRADDLE C.L.S.
2) ALL N.P.T. CONNECTIONS ARE FEMALE TAPERED PIPE THREAD.
3) CONNECTION FLANGES ARE ANSI STD. DRILLING & THICKNESS UNLESS OTHERWISE NOTED.
4) SAFETY DEVICES OR OVER-PRESSURE PROTECTION SHALL BE PROVIDED PRIOR TO PLACING VESSEL IN SERVICE.
5) DIMENSIONAL TOLERANCES UNLESS OTHERWISE NOTED: TEMA STD.
6) EJECTOR PACKAGE MOUNTED ON SURFACE CONDENSER.
7) WATERBOX INTERNALS TO BE COAL TAR EPOXY COATED.

DRAWING LIST:

SURFACE CONDENSER	D-47107-1
EJECTOR PACKAGE	D-47107-13
ACCESSORY LIST	A-47107-2X
A.R.V.	A-47107-3X

EST'D. WGTS. (LBS.)

EMPTY	28,000
FLOODED	48,530
OPERATING	28,000

CERTIFIED CORRECT
GRAHAM MFG. CO. INC.
A.J. Maciejewski

		M.A.W.P. P.S.I.G.@	DESIGN TEMP (°F)	HYDRO TEST PRESS. P.S.I.G.@	CORR. ALLOW. (INCHES) ①
	SHELL SIDE	FV & 15	300	FLOODED	0.0063"
	TUBE SIDE	125	140	187.5	0.0063"

① CARBON STEEL PRESSURE PARTS.

REV.	DESCRIPTION	MADE	CHKD	DATE
A	ADDED NOZZLE LOADS FOR S1	PBB	SJS	9/25/96
0	ORIGINAL ISSUE	—	—	—

GRAHAM MANUFACTURING CO., INC.
20 FLORENCE AVE. BATAVIA, NEW YORK

SURFACE CONDENSER

SCALE	DSGN	DRWN	CHKD	APPD	DATE	DWG. NO.	REV.
1:16	SJS	MJC	JCS		03/12/96	D-47107-1	A

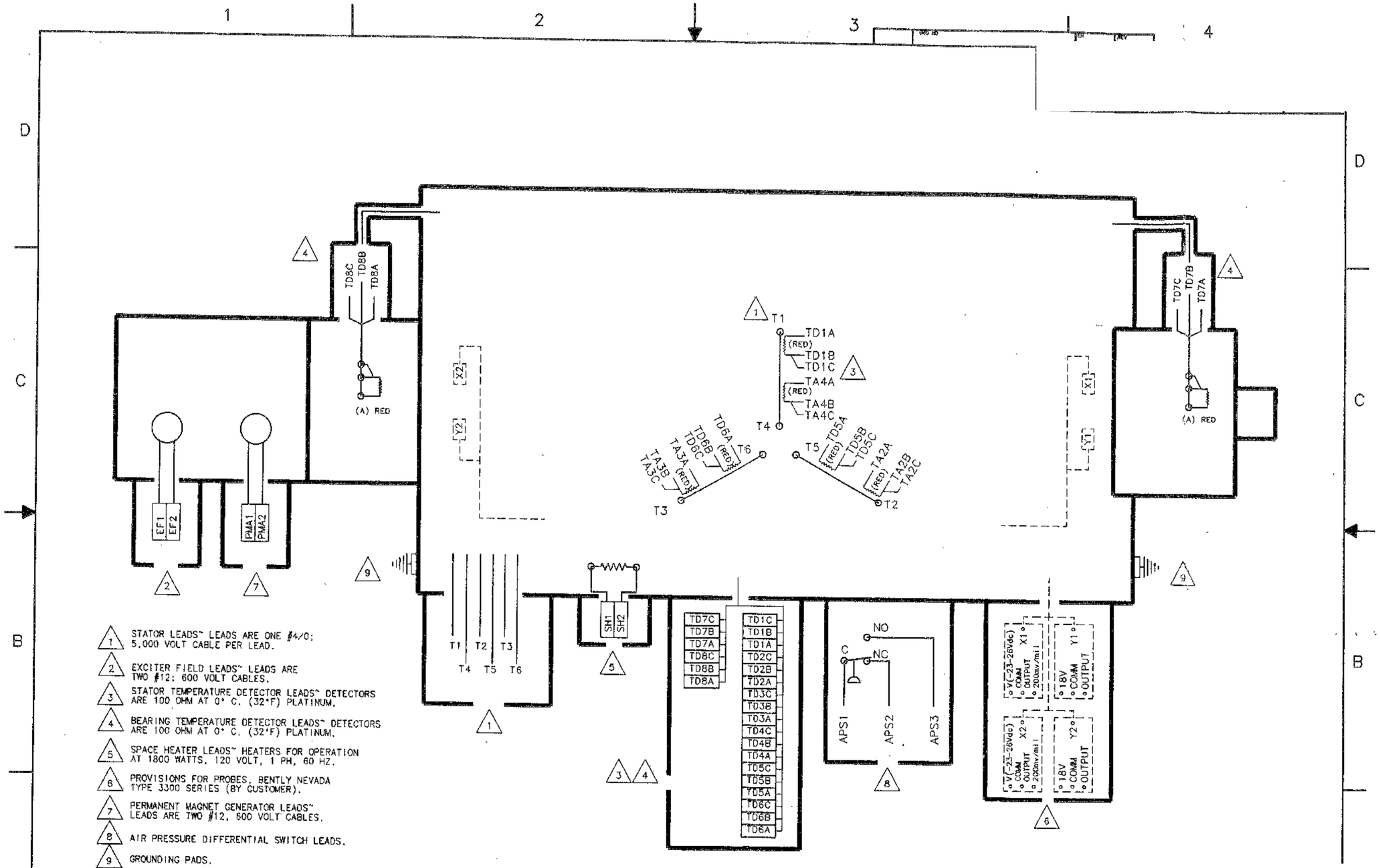

1. STATOR LEADS~ LEADS ARE ONE #4/0; 5,000 VOLT CABLE PER LEAD.
2. EXCITER FIELD LEADS~ LEADS ARE TWO #12; 600 VOLT CABLES.
3. STATOR TEMPERATURE DETECTOR LEADS~ DETECTORS ARE 100 OHM AT 0° C. (32°F) PLATINUM.
4. BEARING TEMPERATURE DETECTOR LEADS~ DETECTORS ARE 100 OHM AT 0° C. (32°F) PLATINUM.
5. SPACE HEATER LEADS~ HEATERS FOR OPERATION AT 1800 WATTS, 120 VOLT, 1 PH, 60 HZ.
6. PROVISIONS FOR PROBES, BENTLY NEVADA TYPE 3300 SERIES (BY CUSTOMER).
7. PERMANENT MAGNET GENERATOR LEADS~ LEADS ARE TWO #12, 600 VOLT CABLES.
8. AIR PRESSURE DIFFERENTIAL SWITCH LEADS.
9. GROUNDING PADS.

REF: C72202

FILE: 25A -2

WORKING TOLERANCES UNLESS OTHERWISE SPECIFIED

MACHINING	FABRICATION	FINISH
± .01 THRU 2.00" ± .015 OVER 2.00 THRU 10.00" ±.03 OVER 10.00" ANGLE ±0.5°	± .12 THRU 24.00" ± .24 OVER 24.00"	125 MICRO ✓ INCHES

ALL DIMENSIONS IN INCHES UNLESS OTHERWISE SPECIFIED

ALL THREADS TO BE CLASS 2 UNIFIED

APP.: * -

APP.: - -

Nuttall Gear Corporation
2221 Niagara Falls Blvd., P.O. Box 1032, Niagara Falls, N.Y. 14302
716/731-5180 FAX 716/731-9329

UNIT SIZE	SD 16-6L
ASSEMBLY POSITION	R.H.

HORESEPOWER	2500 KW
SERVICE FACTOR	1.3
RATIO	3.3261:1
INPUT RPM	5987
OUTPUT RPM	1800
GEAR DRIVE EFFICIENCY	98.6%

ACCESSORIES-

1.) GLOBE VALVE WITH LOCKSHIELD IS FACTORY PRESET FOR 10 TO 15 PSIG TO SPRAY. (GLOBE VALVE HANDLE IS MOVED AND SHAFT IS CAPPED OFF PRIOR TO SHIPMENT)

2.) SHAFT DRIVEN PUMP - BROWN & SHARP MODEL #537 38 GPM @ 50 PSI & 1800 RPM, ROTATION IS CW, 1.5" INLET, 1.5" OUTLET.

3.) 'ASHCROFT' BI-METAL 5.0" DIA. DIAL TYPE THERMOMETER WITH 0° TO 200°F (-20 TO 90°C) DUAL SCALE LOCATED AT EACH BEARING. MODEL #50EI60L-080

4.) PROVISIONS FOR MOUNTING CUSTOMERS BENTLY NEVADA SERIES #2100, X & Y VIBRATION PROBE HOLDER & PROXIMITOR (2 AT EACH BRG, 8 PLACES TOTAL)

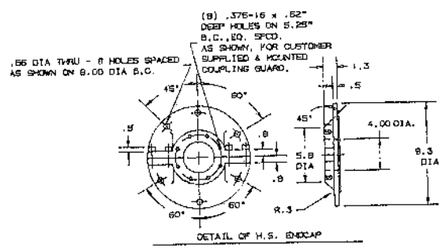

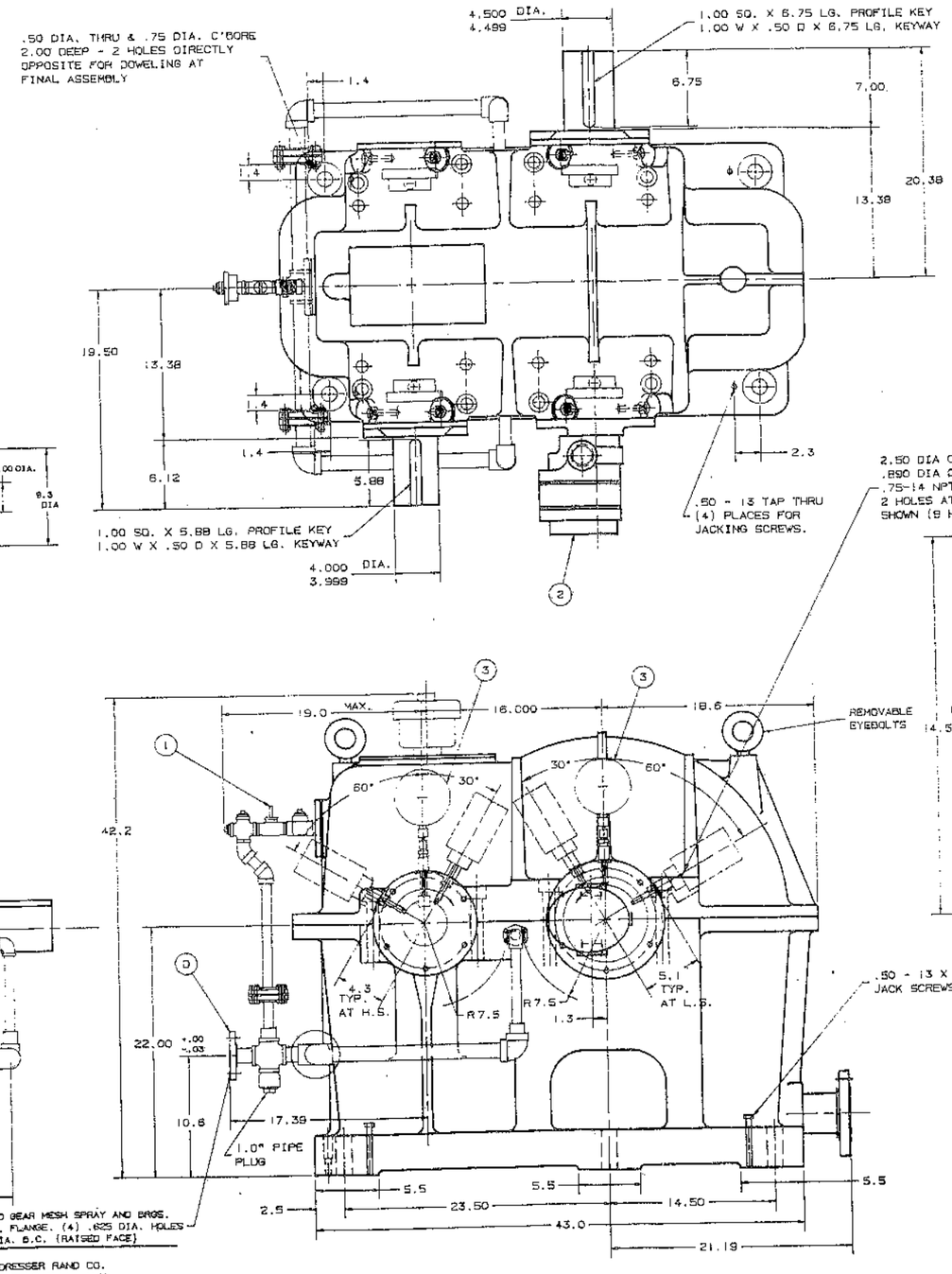

NOTES:

A.) LOW SPEED SHAFT TOTAL ENDFLOAT SET AT .020 TO .050.

B.) IF EXCESS OIL VAPOR PERSISTS AFTER INSTALLATION CUSTOMER MAY VENT SAME TO OUTSIDE.

C.) APPROX. WEIGHT OF UNIT W/O OIL 4100 LBS.

D.) THIS LUBE SYSTEM IS DRY SUMP DESIGN WITH AN OVERSIZED SHAFT DRIVEN MAIN OIL PUMP FOR CONNECTION TO CUSTOMER'S LUBE OIL SYSTEM. GEAR UNIT LUBE OIL REQUIREMENTS AS FOLLOWS: TYPE OF LUBE OIL REQUIRED: AGMA #2, ISO 68, ASTM 315 10 GPM OIL @ 120°F AND 25 PSI TO GEAR. GEAR HEAT LOAD IS 136,720 BTU/HR. 28 GPM OF OIL REQUIRED BY CUSTOMER.

E.) GEAR MECHANICAL RATING = 4771 HP (3559 KW)
GEAR DRIVE EFFICIENCY= 98.4%

F.) RECOMMENDED SET POINTS.
BEARINGS: ALARM 180°F
SHUTDOWN 190°F

SHAFT VIBRATION:

	L.S. SHAFT	H.S. SHAFT
ALARM	2.5 MILS P/P	1.9 MILS P/P
SHUTDOWN	3.0 MILS P/P	2.4 MILS P/P

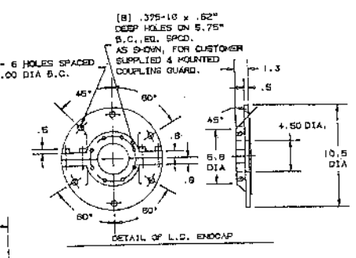

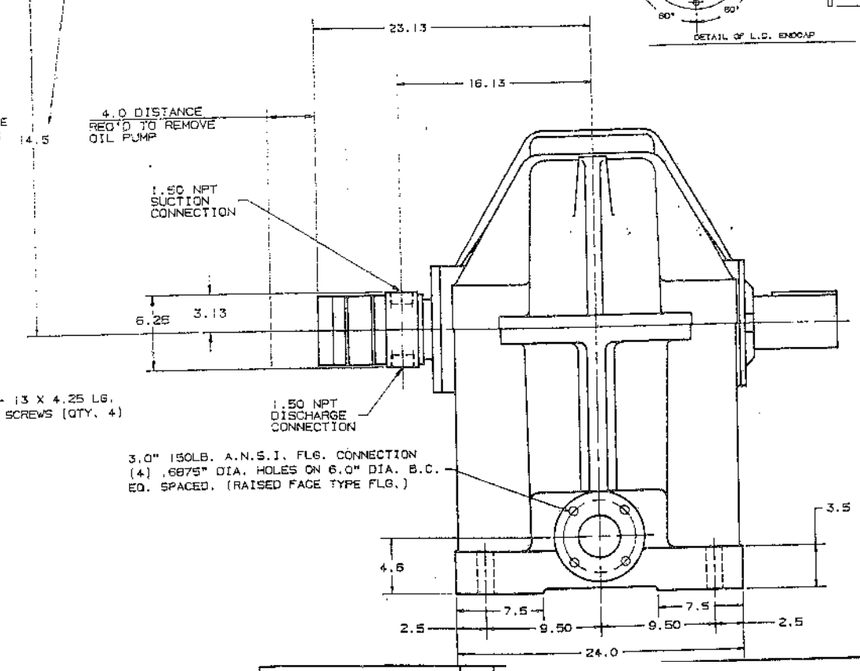

CUSTOMER: DRESSER RAND CO.
WELLSVILLE, N.Y.
P.O. #T-26361-5, QTY. 1
PART #6010241
FOR: CITY OF HARRISONBURG, VIRGINIA

UNIT SIZE - SD 16-6L
H.P. - 2500 KW
S.F. - 1.3
RPM IN 5987
RPM OUT 1800
CW ROT. FACING L.S. SHAFT.
R.H. ASSY.
RATIO 3.3261 : 1

STANDARD TOLERANCES
1 PLACE DECIMALS ± .1
2 PLACE DECIMALS ± .02
3 PLACE DECIMALS ± .005
4 PLACE DECIMALS ± .0005
ANGLES ± 1° (EXCEPT DRILLED HOLES)
DRILLED HOLES -.000 +.015

SUPPLIER TO PRIME PAINT ALL CASTINGS AND FABRICATIONS PER NUTTALL SPEC PDS 32250-BR

ENG. DWG. 04029311

96R60785 CHANGE